HIWIN®

Motion Control & Systems

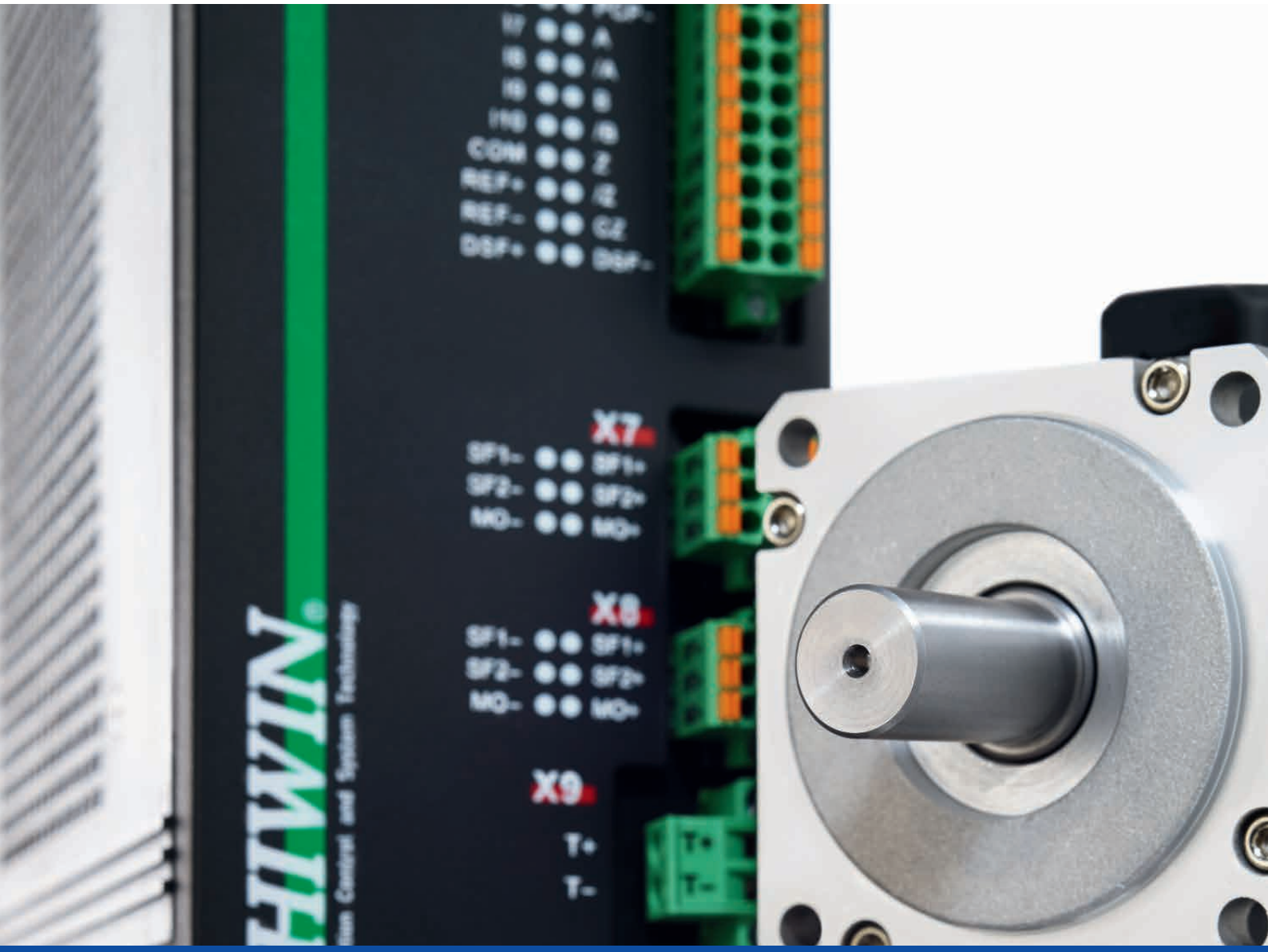

Drives & Servo Motors

www.hiwin.de

HIWIN GmbH
Brücklesbünd 2
D-77654 Offenburg
Phone +49 (0) 7 81 9 32 78 - 0
Fax +49 (0) 7 81 9 32 78 - 90
info@hiwin.de
www.hiwin.de

Note:
The technical data in this catalogue may
be changed without prior notice.

HIWIN®
Motion Control & Systems

Welcome to HIWIN

As well as linear and torque motors, the HIWIN product range includes suitable servo drives and rotary servo motors for the dynamic, high-precision positioning of belt and spindle axles. Drives and servo motors are available in different versions for different applications.

Drives & Servo Motors

Contents

HIWIN®
Motion Control & Systems

Contents

Drives & Servo Motors
Servo drive

1. Servo drive

1.1 HIWIN D1-N drive

The universal servo drive D1-N controls both linear and torque motors and rotary servo motors.

- Peak current of 9, 18, 36 and 90 A
- Integrated STO safety function
- EtherCAT CoE and EtherCAT mega-ulink

1.2 HIWIN D2 drive

For efficient and economical use, for example in belt and spindle axles, specially adapted to HIWIN rotary servo motors.

- 100 W, 400 W and 1000 W
- EtherCAT mega-ulink

1.3 General properties of HIWIN servo drives

Large controller bandwidth

The optimised motion control algorithms and the fact that the controller can only be adapted to the application by a superordinate amplification factor (common gain) results in a very short response time that meets all the requirements of a highly dynamic motion profile.

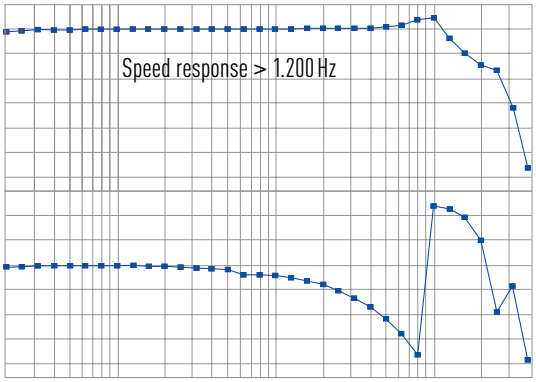

High acceleration dynamics

The fully digital vector-controlled current controller allows an extremely high servo performance to be achieved. Changing from –3000 rpm to +3000 rpm takes just 0.006 seconds.

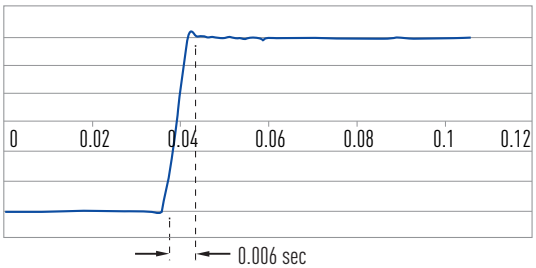

Error compensation

The servo drives feature sophisticated error compensation to optimise the position accuracy of the mechanical drive system. The error correction table can contain up to 16 000 entries.

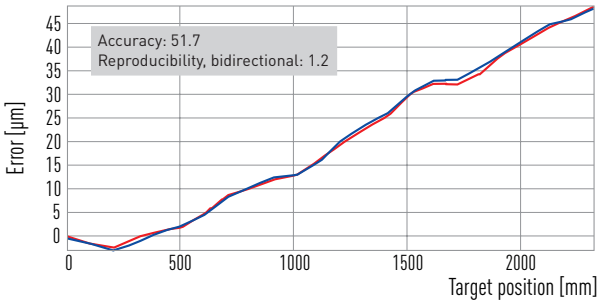

Without error compensation

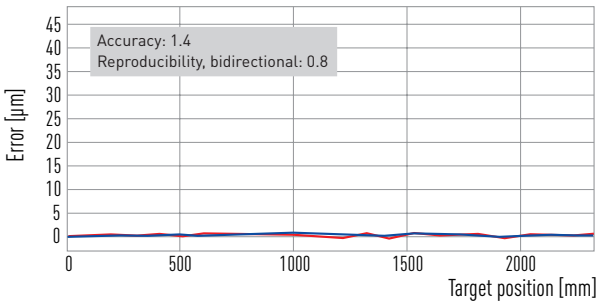

With error compensation

Vibration suppression

The mechanical vibration of the complete system that arises during motion can be very effectively reduced by the vibration suppression function of the servo drive.

Electronic gear and encoder emulation

The servo drives offer a host of features. For example, the built-in electronic gear adjusts the frequency of the control pulses from the higher-level control for processing in the drive. Another feature is the encoder emulation. This allows the resolution of encoder signals sent to the higher-level control to be adapted, avoiding compatibility problems between the resolution of the encoder and the higher-level control.

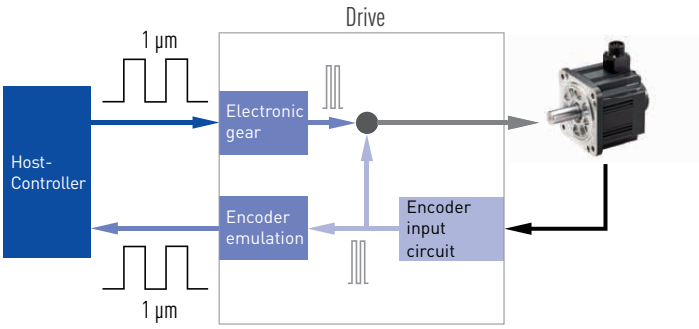

Drives & Servo Motors
Servo drive

1.4 "Lightening" commissioning software

The HIWIN commissioning software Lightening provides a range of tools to optimise control behaviour. These include a real-time oscilloscope, frequency analysis tools (FFT and Bode diagram), error compensation and configuration of inputs and outputs.

Error compensation tool

To optimise the position accuracy of the drive, the error compensation tool enters measured values generated in a reference measurement by a high-precision laser interferometer in the error correction table. This compensates for lead deviations of a ballscrew or encoder error, for example.

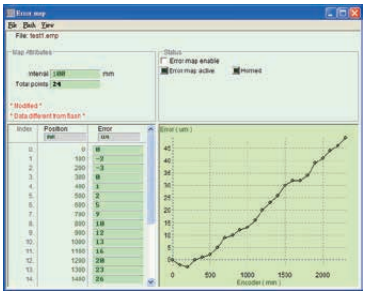

Controller optimisation tool

The drive is a powerful, easy-to-use tool for frequency optimisation of the control circuit. The frequency response of the controller is shown as a graph. This graphical support makes it relatively straightforward to optimise the overall behaviour of the control circuit.

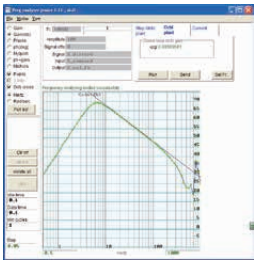

Superordinate amplification factor: common gain

Once the individual amplification factors have been defined by the various software tools, further optimisation is achieved with the superordinate amplification factor of common gain. The common gain can be defined for the motion phase, the engaging phase and holding the position.

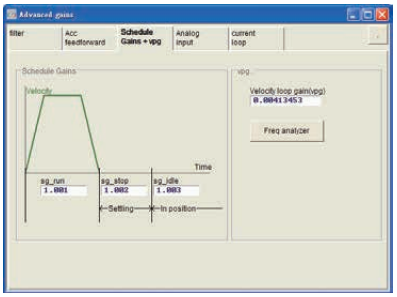

I/O center

The I/O center makes it easy to organise the various I/O functions of the drive's digital inputs and outputs and therefore adapt them to different hardware interfaces of the user's higher-level controls. In the I/O centre you can also check the status of inputs and outputs and invert the signals.

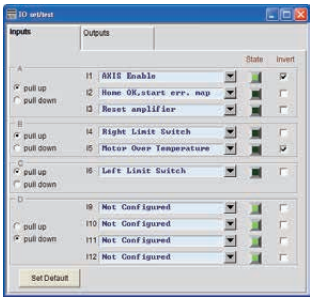

Analysis tool

The analysis tool allows you to display, analyse and rectify resonance vibrations in the driveline. With graphical support the resonance frequency can be determined with an FFT analysis and corrected with an appropriate filter (low pass or notch).

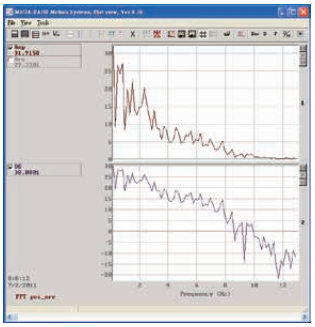

1.5 D1-N servo drive

The servo drive D1-N supports rotary servo motors, linear and torque motors and therefore the entire range of HIWIN motor types. The wide range of supported encoder interfaces (digital, analogue $1V_{SS}$, EnDat 2.2, HIWIN resolver) and analogue and digital Hall sensors allow the D1-N to be used in many different ways, especially with linear motors in conjunction with various position measuring systems. Motors made by other manufacturers with the named encoder interfaces can also be easily controlled with the D1-N.

The available communication interfaces are EtherCAT CoE (see Page 14), EtherCAT mega-ulink (see Page 14), step direction, and a ± 10 V interface.

The STO safety function (safe torque off) complies with IEC61800-5-2 (certified by TÜV Nord) and is directly integrated in the drive. In the event of an error, the motor current and therefore the torque on the motor can therefore be safely cut off via the D1-N without having to interrupt the supply voltage on the drive. Elaborate hardware for cutting off the supply voltage is not needed, and even the process of switching back on again is considerably faster and smoother.

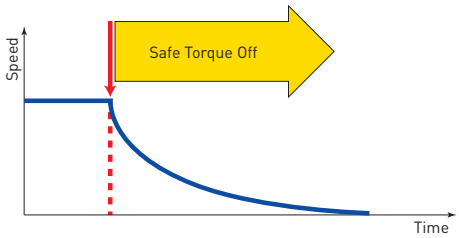

All connections on the D1-N servo drive are labelled and designed as plug-in connections. The wire strands for the I/O signals can be attached directly to the spring terminals. This eliminates the time-consuming process of fitting screws, allowing the device to be replaced more quickly. Error diagnosis can be performed on the device itself thanks to an alphanumeric display. The Lightening software allows the D1-N to be quickly and conveniently configured and started up with the help of a mini USB interface. The software can be downloaded free from www.hiwin.de.

Drives & Servo Motors

D1-N servo drive

1.5.1 Interfaces D1-N

- Intermediate circuit voltage and brake resistor connection
- EtherCAT
- Power supply
- USB interface
- STO (Safe Torque Off)
- STO daisy chain
- Motor temperature monitoring

The "Lightening" commissioning software can be downloaded from our website **www.hiwin.de**.

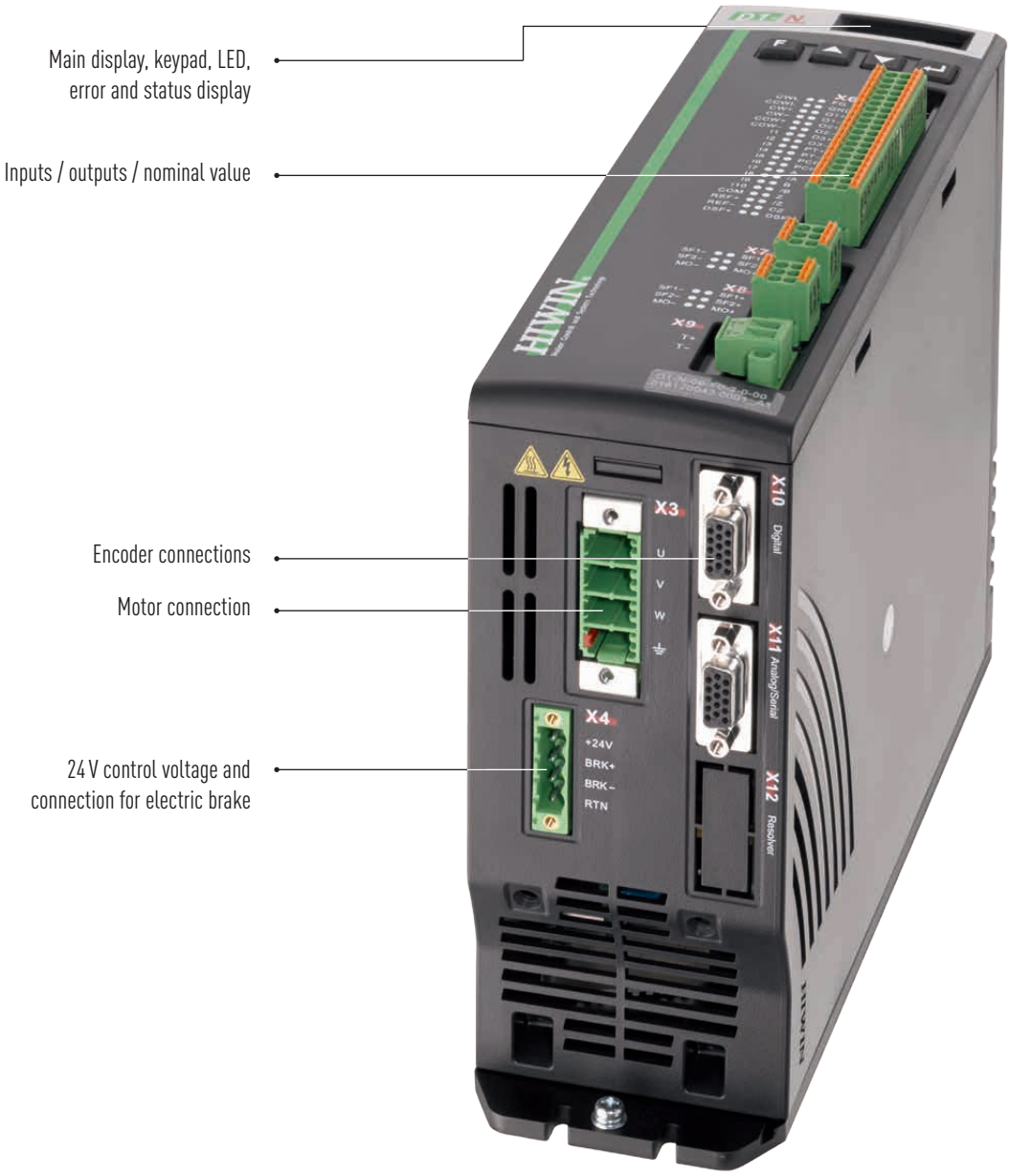

1.5.2 Order code D1-N

D1-N	18	E	0	2	0

HIWIN servo drive D1-N

Peak current:
09: 9 A
18: 18 A
36: 36 A
90: 90 A

Communication:
E: EtherCAT CoE (standard)
F: EtherCAT mega-ulink
S: Step/direction, ± 10 V interface

Encoder:
0: EnDat 2.2, analogue 1 V_{SS}; digital TTL
2: Analogue 1 V_{SS}; digital TTL

Power supply:
2: 230 VAC, 1 or 3 phases (09 A, 18 A, 36 A)
4: 400 VAC, 3 phases (90 A)

Heat sink
0: Without heat sink
1: With heat sink

1.5.3 Technical data D1-N

Table 1.1 **Technical data**

Type: D1-N				D1N-09	D1N-18	D1N-36	D1N-90
Power supply		Voltage		100 to 240 VAC ±10 %; 24 – 48 VDC			200 to 420 VAC
		Frequency		47 to 63 Hz			50/60 Hz
		Number of phases		1 or 3			3
		Control voltage		24 VDC ±10 %			
		Maximum control current		1.5 A			
Output current		Continuous current (effective)		2.1 A	4.2 A	8.5 A	21 A
		Peak current (effective)		6.4 A	12.7 A	25.5 A	63.6 A
		Maximum duration of peak current		1 second			
Type of control				IGBT PWM vector control			
Switching frequency				16 kHz			8 kHz
Motor types supported				Linear motors, torque motors, AC servo motors			
Encoder interface		Supply voltage of encoders		+5 VDC ±5 %, 500 mA			
		Analogue encoder		Sin/Cos 1 V_{SS} (Z, /Z, differential); max. input frequency < 1 MHz			
		Digital encoder		TTL (A, /A, B, /B, Z, /Z, differential)			
		HIWIN resolver		Option			
		EnDat 2.2		Option			
		Hall sensors		Digital (A, B, C), 120° offset			
Encoder output		Encoder output (buffered)		Forwarding of incoming encoder signals, incl. quadrupling (max. 18 000 000 incr/s, RS422 differential)			
		Encoder emulation		Forwarding of incoming encoder signals, can be scaled in any way (max. 18 000 000 incr/s, RS422 differential)			
Nominal value inputs	Position regulation	Digital	Function	Step/direction, CW/CCW, AB signals (quad.)			
			Input frequencies	Differential: 4 000 000 incr/s			
				Single end: 500 000 incr/s			
	Speed control	Analogue	Input resistance	10 kΩ			
			Input voltage	±10 VDC			
			Resolution	12-bit			

Table 1.1 **Technical data (continued)**

Type: D1-N				D1N-09	D1N-18	D1N-36	D1N-90
Nominal value inputs	Torque control	Analogue	Input resistance	10 kΩ			
			Input voltage	±10 VDC			
			Resolution	12-bit			
	EtherCAT		Functions	PDO communication (flexible mapping) SDO communication Distributed clocks			
			CiA402 modes	Profile Position Mode (1) Profile Velocity Mode (3) Profile Torque (4) Velocity Mode (2) Cyclic Synchronous Position Mode (8) Cyclic Synchronous Velocity Mode (9) Cyclic Synchronous Torque (10) Homing (6)			
Inputs / outputs which can be parameterised		10 digital outputs		Function can be freely selected			
		3 digital outputs		Function can be freely selected			
		Brake control		24 VDC, max. 1 A			
		Capture input		Response time < 7 ns (PCP input)			
		Cam controller		Response time < 7 ns (PT output), 5 VDC			
DC intermediate circuit		Overvoltage		+HV > 404 VDC			+HV > 800 VDC
		Undervoltage		+HV < 60 VDC			+HV < 158 VDC
Brake resistor		Connection		Internal (50 Ω/150 W) and/or external			External only
		Activation threshold		+HV > 390 VDC			+HV > 735 VDC
		Deactivation threshold		+HV < 380 VDC			+HV < 695 VDC
		Tolerance		±5 %			
Cooling		External heat sink		No	No	Yes	Yes
		Integrated fan		No	Yes	Yes	Yes
EMC filter				No integrated EMC filter			
Safety function				STO (Safe Torque Off)			
User interface				LCD, 4-button control panel			
Parameterisation interface				USB			
Weight				2.05 kg	2.20 kg	3 kg	4 kg
Ambient conditions		Ambient temperature		Operation: 0 to 50 °C (above 50 °C with air conditioning) Transport/storage: –25 to 65 °C			
		Air humidity		0 to 90 %, non-condensing			
		Operating altitude		Up to 1000 m above sea level			
		Vibrations		1 G (10 to 500 Hz)			
		Protection class		IP20			
		Contamination level		2			

1.5.4 Options D1-N

EtherCAT interface

The new D1-N servo drive supports the Ethernet-based EtherCAT field bus system. EtherCAT is an open technology which is regulated in international standards IEC 61158, IEC 61784 and ISO 15745-4. EtherCAT is a very fast industrial Ethernet system, also suited to use in time-critical motion control applications. The D1-N supports the CoE (CANoverEtherCAT) protocol and can therefore be integrated in any EtherCAT master controller which supports this protocol. Furthermore, the D1-N works according to the standardised drive profile CiA 402 and can therefore be easily integrated into the TwinCAT control software of Beckhoff as an NC axis.

mega-ulink interface

The D1-N servo drive supports the proprietary protocol mega-ulink, which is based on EtherCAT. The EtherCAT mega-ulink interface can be used for communication and control between the industrial PC and servo drive. Communication takes place via the standard Ethernet interface on the PC and the EtherCAT interface on the drive. A dll library (MPI.dll) handles communication and control between PC and drive controller. A detailed description of this library and how to use it is available at www.hiwin.de.

1.5.5 Dimensions D1-N

- **D1-N-09**

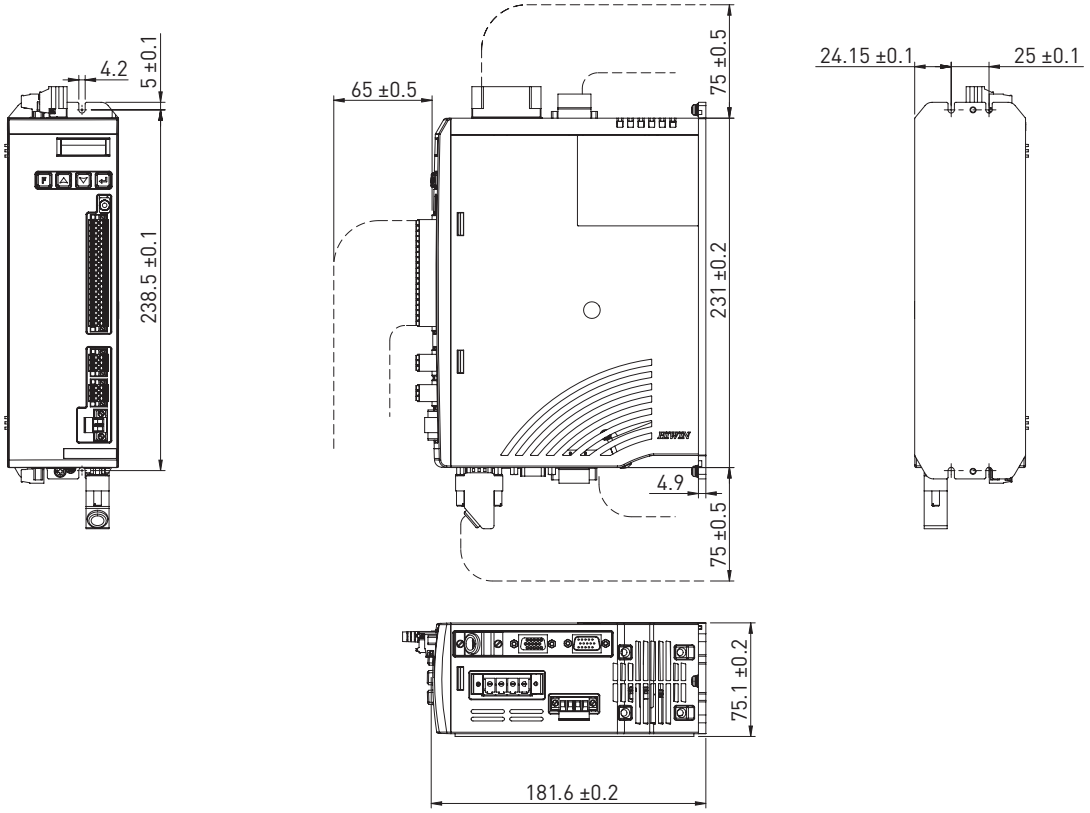

Unit: mm

- **D1-N-18**

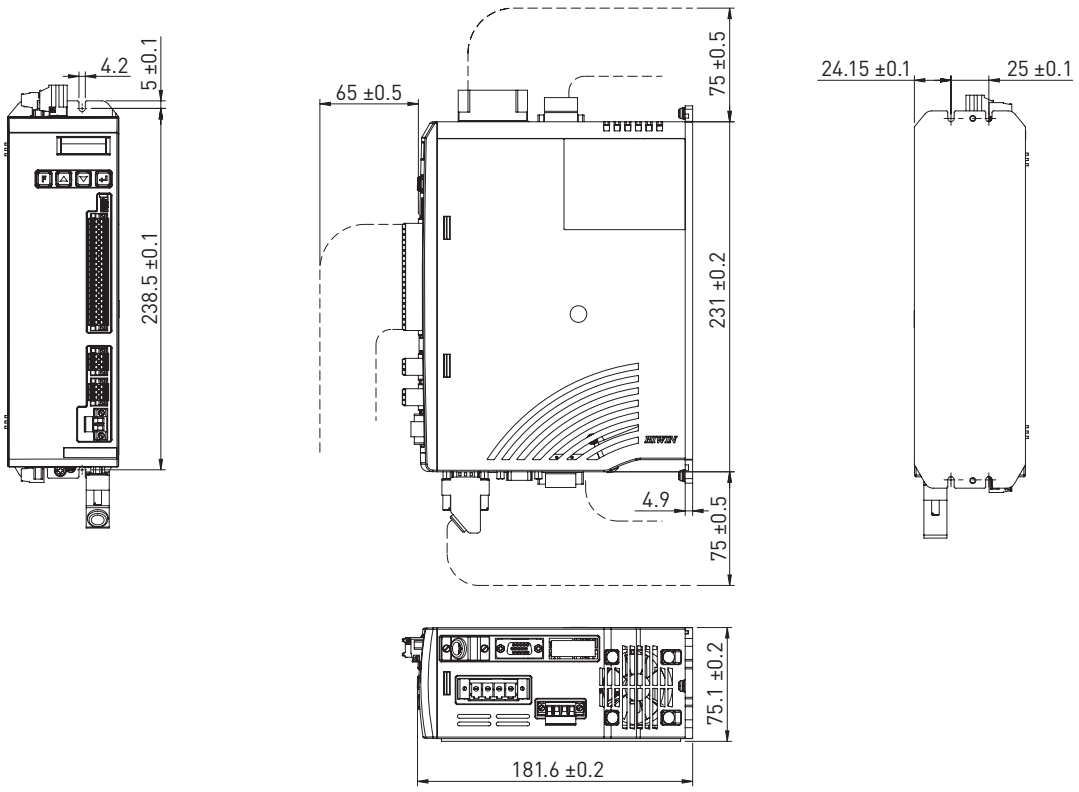

Unit: mm

Drives & Servo Motors

D1-N servo drive

D1-N-36

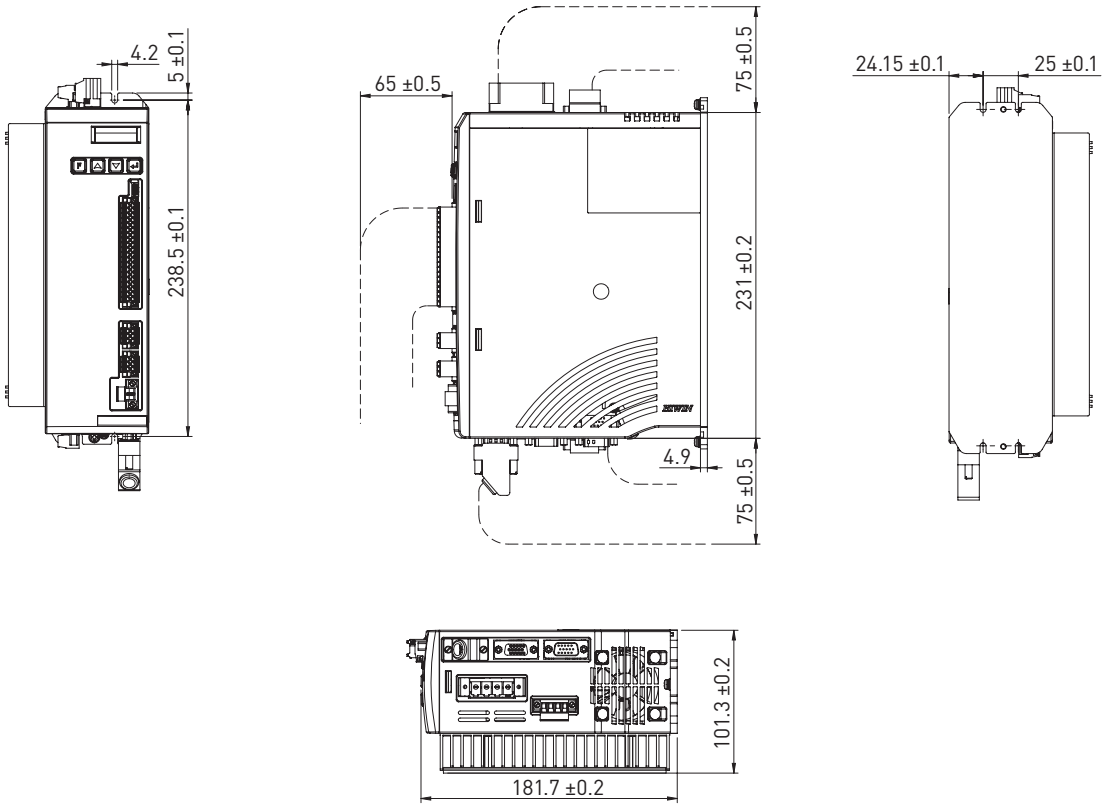

Unit: mm

D1-N-90

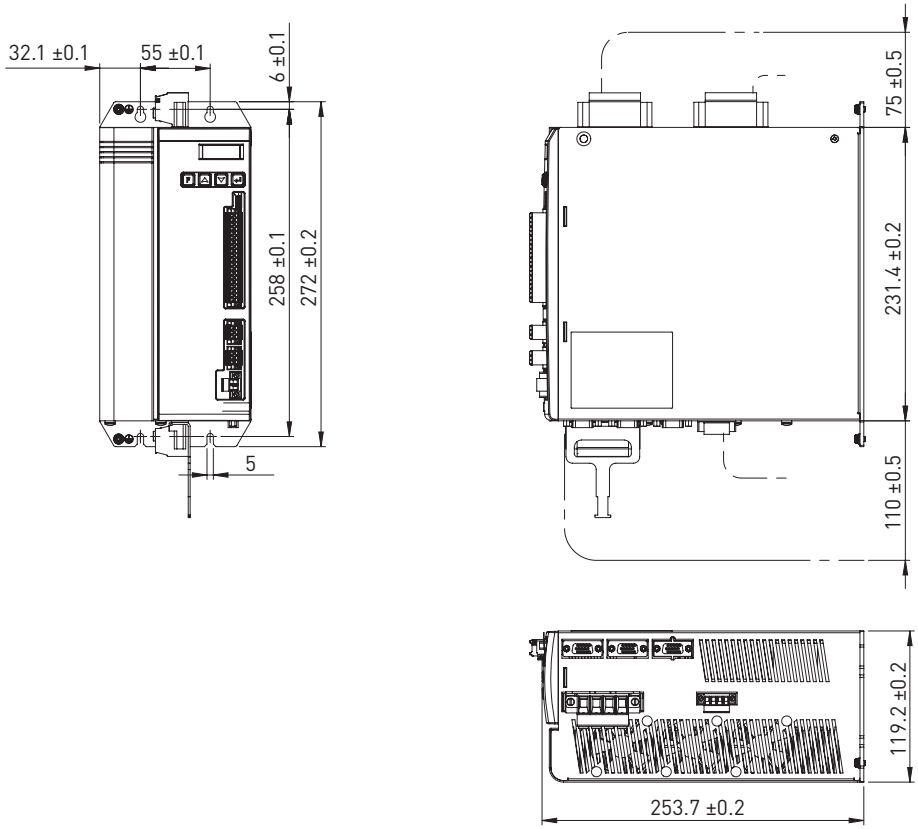

Unit: mm

1.5.6 Accessories D1-N

1.5.6.1 Cables

Table 1.2 **Cables for D1-N servo drive**

Article number	Designation	Connector	Figure	Length
8-10-0864	USB parameterisation cable	CN3	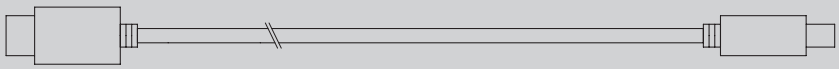	2 m

Table 1.3 **Motor cables for D1-N servo drive**

Article number	Length [m]	Motor type	Description
8-10-0069	3	Linear motor	HIWIN motor cable, suitable for drag chains, 1.5 mm², with M23 connector on motor side, with open ends on D1-N side
8-10-0070	5		
8-10-0071	8		
8-10-0072	10		
8-10-0593	3	Linear motor	HIWIN motor cable, suitable for drag chains, 2.5 mm², with M23 connector on motor side, with open ends on D1-N side
8-10-0594	5		
8-10-0595	8		
8-10-0596	10		
8-10-0109	3	Torque motor	HIWIN motor cable, suitable for drag chains, 1.5 mm², with M17 connector on motor side, with open ends on D1-N side
8-10-0110	5		
8-10-0111	8		
8-10-0112	10		

Table 1.4 **Encoder cables for D1-N servo drive**

Article number	Length [m]	Motor type	Description
8-10-0685	3	Analogue	HIWIN encoder cable, suitable for drag chains, with M17 connector on motor side, with Sub-D connector for X11 on D1-N side
8-10-0686	5		
8-10-0687	7		
8-10-0688	10		
8-10-0690	3	Digital	HIWIN encoder cable, suitable for drag chains, with M17 connector on motor side, with Sub-D connector for X10 on D1-N side
8-10-0691	5		
8-10-0692	7		
8-10-0693	10		

1.5.6.2 Connector

Table 1.5 **Connector set for D1-N servo drive**

Article number	Designation	Type	Contacts	Quantity
8-10-0800 D1-N-09, D1-N-18, D1-N-36 **8-10-0897** D1-N-90	X1: Power supply	Connector	4	1
	X2: Brake resistor	Connector	4	1
	X3: Motor connection	Connector	4	1
	X4: Control voltage	Connector	4	1
	X6: Inputs/outputs	Connector	20	1
	X7/X8: Safety functions	Connector	3	2
	X9: Temperature sensor	Connector	2	1
	X10/X11: Encoder	Sub-D connector	15	2
	X12: Encoder	Sub-D socket	15	1
	Motor connector shielding	Hose clip	1	1

The appropriate set of connectors is supplied with each D1-N servo drive

1.5.6.3 Brake resistor

Drives with a 230 V supply are fitted with an internal 150 W brake resistor. If this resistance is not sufficient, the brake power can be increased with the following external brake resistor. For drives with a 400 V supply without an internal brake resistor, the following brake resistor can also be used if required.

Table 1.6 **Brake resistor for D1-N servo drive**

Article number	Designation	Resistance [Ω]	Nominal power [W]	Weight [g]	L1 [mm]	L2 [mm]	W [mm]	H [mm]	L [mm]
8-09-0015	Brake resistor	80	300	305	155	144	36	27	600

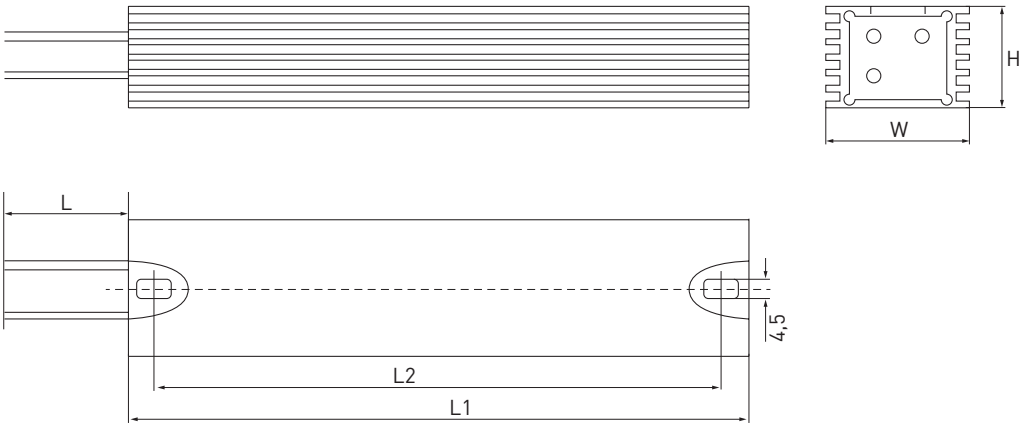

Unit: mm

1.5.6.4 Mains filter

Table 1.7 **Mains filter for D1-N servo drive**

Article number	Designation	Type	Nominal current [A]	Leakage current [mA]	Quantity
8-09-0438	D1-N mains filter, 1-phase	FN2412-8-44	8.0	3.4	1
8-09-460	Ferrite core	—	—	—	1
8-09-0374	D1-N mains filter, 3-phase	FN3258-7-45	8.0	33	1
	Ferrite core	KCF-130-B			2

Drives & Servo Motors
D2 servo drive

1.6 D2 servo drive
The vector-controlled, fully digital HIWIN D2 servo drives are specially designed to work with HIWIN servo motors. Different versions and performance classes are available for different types of application. For easy installation and commissioning there are ready-assembled motor and encoder cables and the free HIWIN commissioning software "Lightening".

1.6.1 Interfaces D2

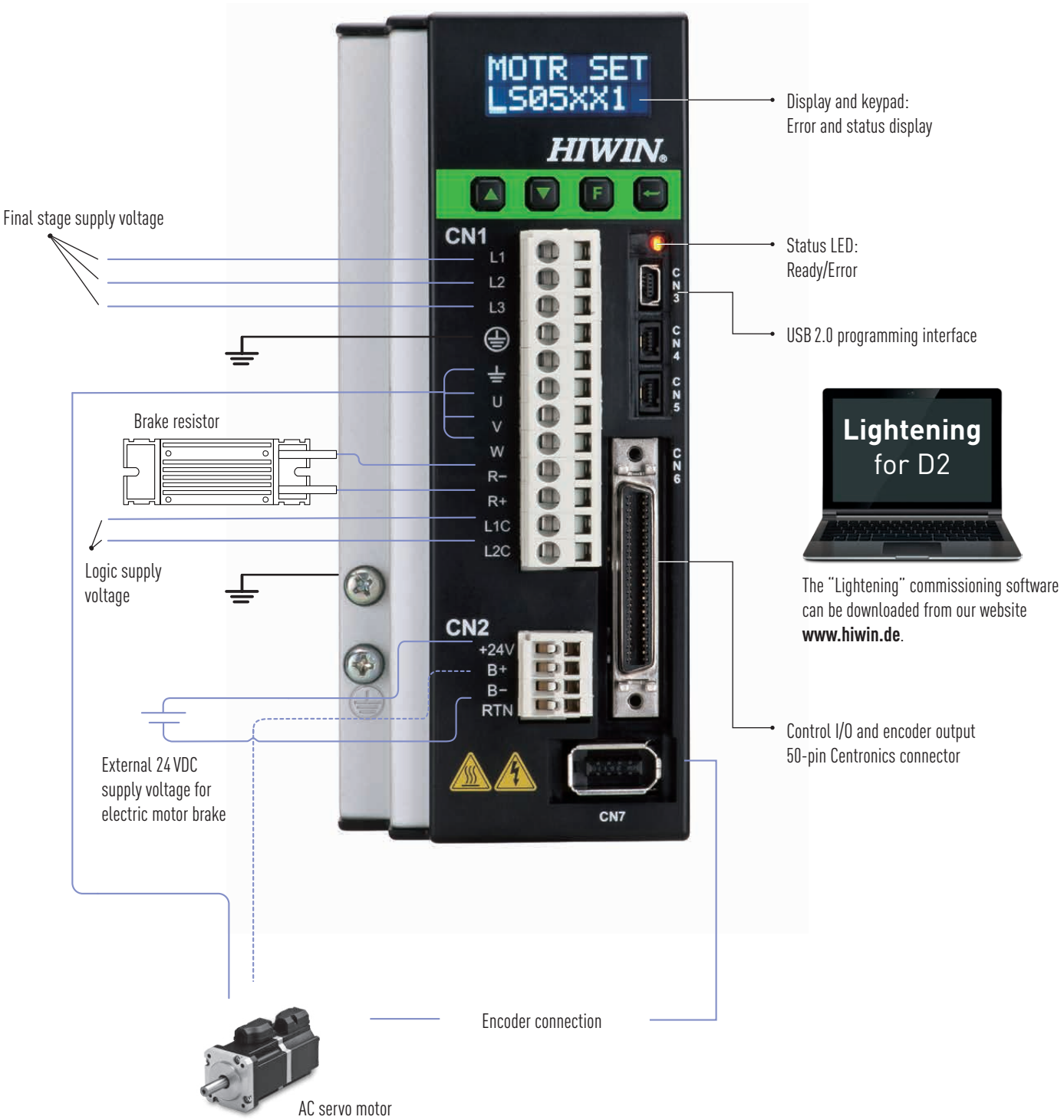

1.6.2 Order code D2

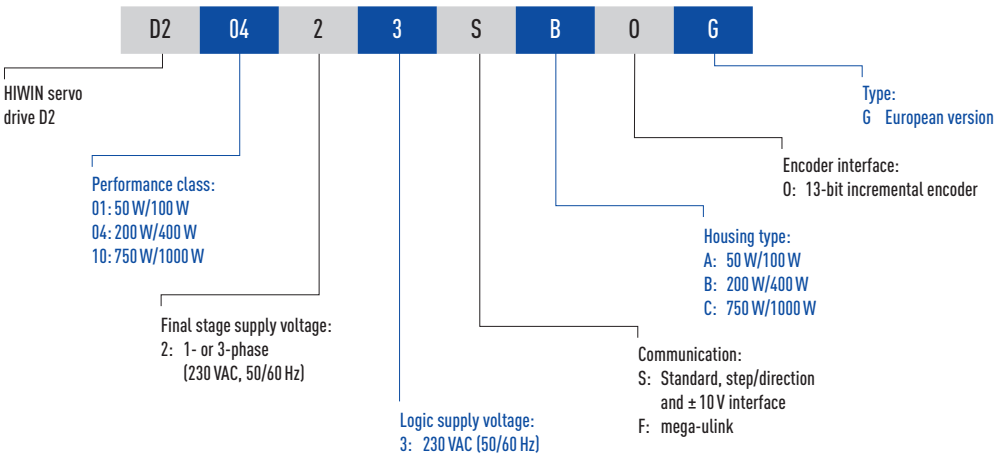

1.6.3 Technical data D2

Table 1.8 **Technical data**

Type: D2				D2-0123	D2-0423	D2-1023
Power supply		Final stage supply voltage and frequency		200 to 240 VAC (± 10 %) / 50 to 60 Hz (± 5 %)		
		Number of phases		1 or 3		
		Power consumption of final stage		1.5 A_{eff}	4.1 A_{eff}	7.5 A_{eff}
		Logic supply voltage and frequency		200 to 240 VAC (± 10 %) / 50 to 60 Hz (± 5 %) 1-phase only		
		Power consumption of logic supply		0.5 A max.		
Output current		Continuous current (effective)		0.9 A	2.5 A	5.1 A
		Peak current (effective)		2.7 A	7.5 A	15.3 A
		Maximum duration of peak current		1 second		
Type of control				IGBT PWM vector control		
Controller sampling rate				Current, speed and position controllers: 15 kHz		
Motor types supported				AC servo motors		
Status LED				Red: Error; Green: Ready		
Operating modes	Position control	Inputs/outputs		Low-speed pulse inputs (CN6 pins: 3, 4, 5, 6) High-speed pulse inputs (CN6 pins: 44, 45, 46, 47)		
		Function		Step/direction; CW/CCW; AB signals (4x evaluation)		
		Maximum input frequency		Low-speed (optocoupler): 500 kHz High-speed (different.): 4 MHz		
		Electric gear		Ratio: pulses/counts: pulses: 1 – 2147483647, counts: 1 – 2147483647		
	Speed/torque control	Analogue	Input resistance	10 kΩ		
			Input voltage	±10 VDC		
			Resolution	12-bit		
		Digital	PWM	Via low-speed pulse inputs		
			Frequency	Min. 36.5 kHz; max. 100 kHz		
			Min. pulse duration	220 ns		

Table 1.8 **Technical data (continued)**

Type: D2			D2-0123	D2-0423	D2-1023
Encoder interface	Operating voltage		+ 5 VDC ± 5 % @400 mA		
	Input	Signal type	A/A, B/B, Z/Z, differential signals		
		Bandwidth	After 4x evaluation 5 million inc/s		
	Output	Signal type	A/A, B/B, Z/Z, differential TTL		
		Resolution	After 4x evaluation 8 million inc/s		
Encoder simulation output			Max. 18 million inc/s, RS422 differential; adjustable scaling		
Communication	Interface		USB 2.0		
Parameterisable I/O interface	Digital inputs		[I1..I9], (single-end, optocoupler)		
	Digital outputs		[O1..O4], (optocoupler)		
	Brake output		BRAKE [CN2_BRK], max. 1 ADC		
Feedback	Resistance		External		
	Activation threshold		+ HV > 370 VDC		
	Deactivation threshold		+ HV < 360 VDC		
	Tolerance		± 5 %		
Monitoring functions			Short circuit, overvoltage (> 390 VDC ± 5 %), undervoltage (< 60 VDC); position error, encoder error, motor phase monitoring, overtemperature D2 (IGBT > 90 °C ± 1°C), motor overtemperature		
Autotuning			With automatic mass inertia calculation		
Error mapping	Method		Compensation table for correcting position errors through linear interpolation		
	Table entries		Max. 16,000		
	Activation		Following successful referencing or via digital input signal		
VSF (vibration suppression)			0.1 Hz to 200 Hz		
Other functions			Friction compensation, gear play compensation		
External EtherCAT adapter (option)			EtherCAT with mega-ulink protocol		
Ambient conditions	operating temperature		0 to 40 °C (above 55 °C only with air conditioning)		
	Storage temperature		-20 °C to 65 °C		
	Air humidity		20 to 85 % (non-condensing)		
	Operating altitude		< 1000 m above sea level		
	Vibration		5.88 m/s^2 (10 to 60 Hz)		
	protection class		IP20		

1.6.4 Options D2

- **mega-ulink interface**

The D2 servo drive supports the proprietary protocol mega-ulink, which is based on EtherCAT. The EtherCAT mega-ulink interface can be used for communication and control between the industrial PC and servo drive. Communication takes place via the standard Ethernet interface on the PC and the EtherCAT mega-ulink interface on the drive. A dll library (MPI.dll) handles communication and control between PC and drive controller. A detailed description of this library and how to use it is available at www.hiwin.de.

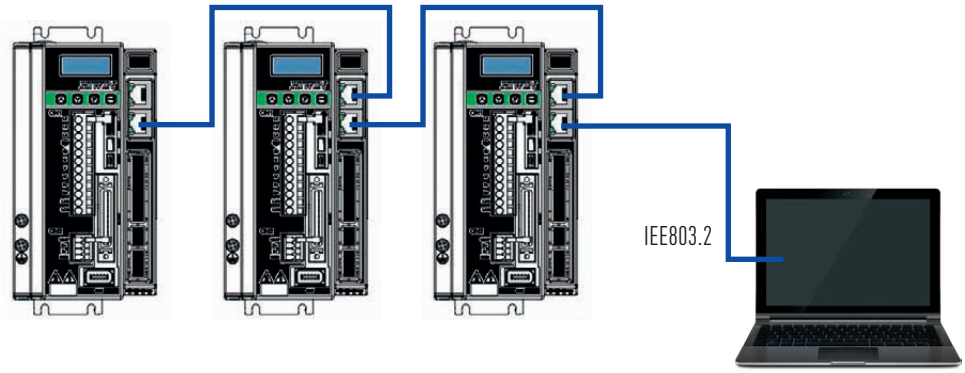

Drives & Servo Motors

D2 servo drive

1.6.5 Dimensions D2 (standard version)

- **Housing type A**

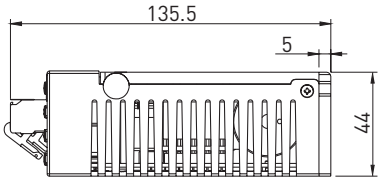

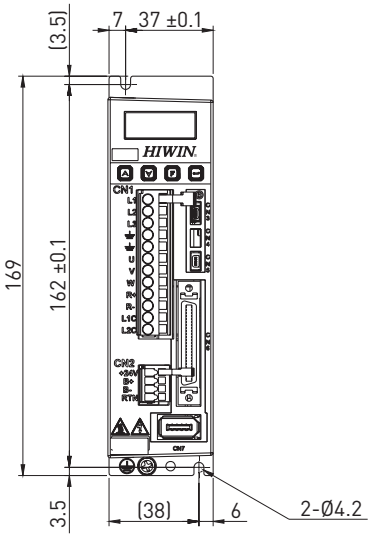

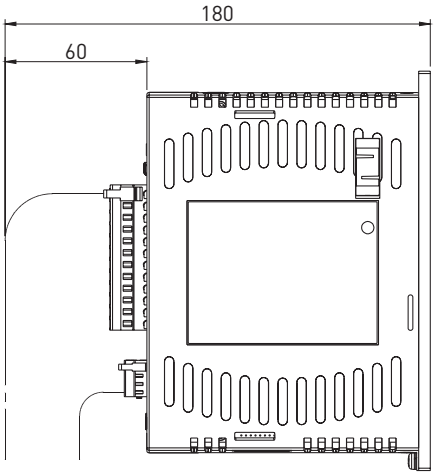

Unit: mm

- **Housing type B**

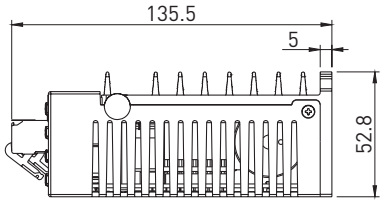

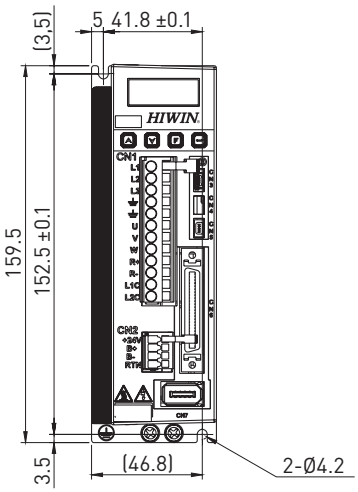

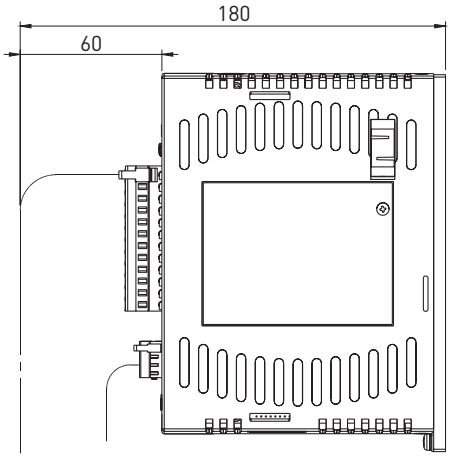

Unit: mm

Housing type C

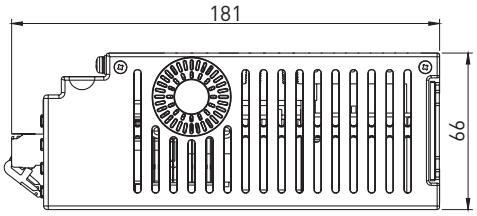

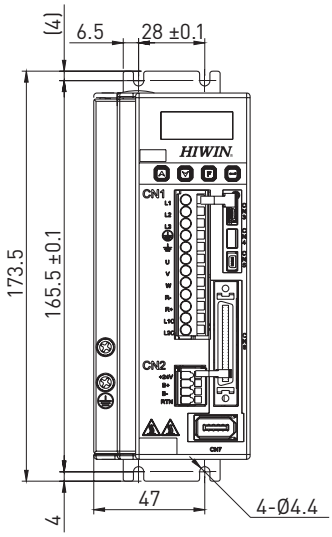

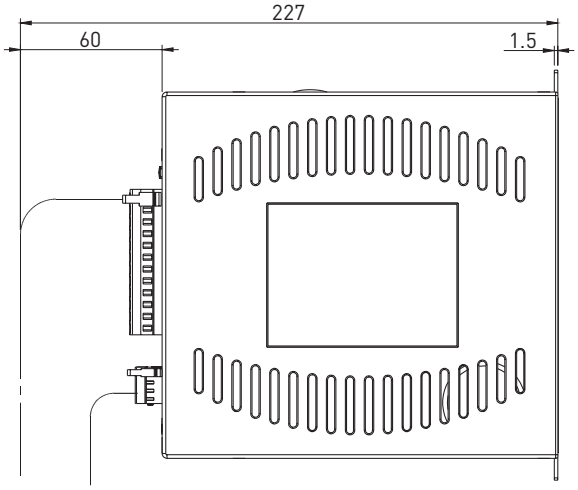

Unit: mm

Drives & Servo Motors

D2 servo drive

1.6.6 Dimensions D2 (mega-ulink version)

- **Housing type A**

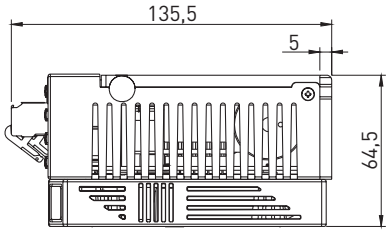

Unit: mm

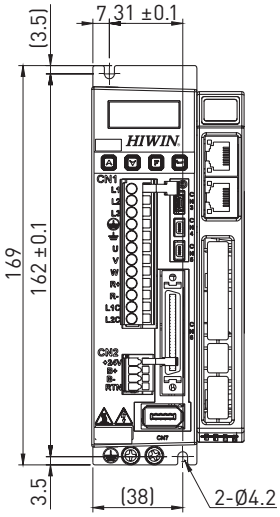

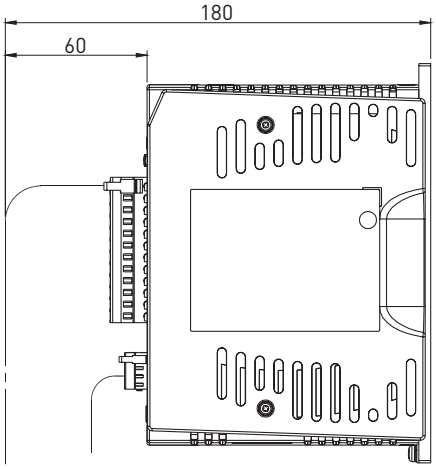

- **Housing type B**

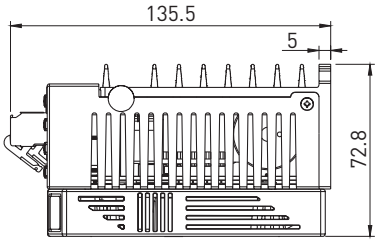

Unit: mm

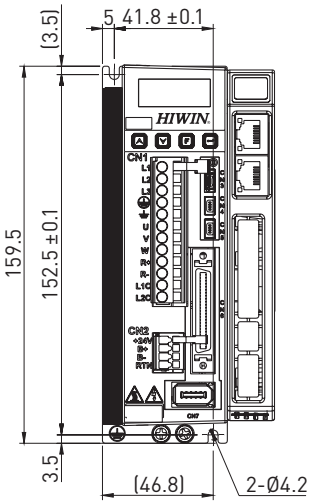

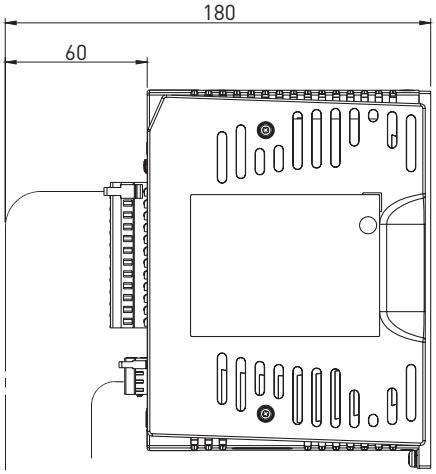

Housing type C

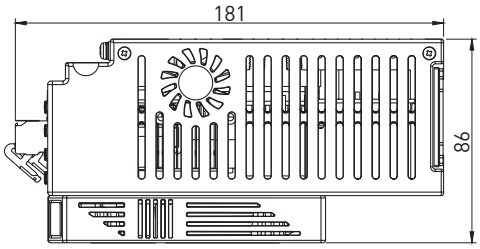

Unit: mm

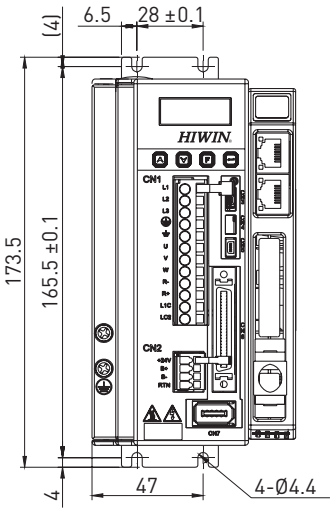

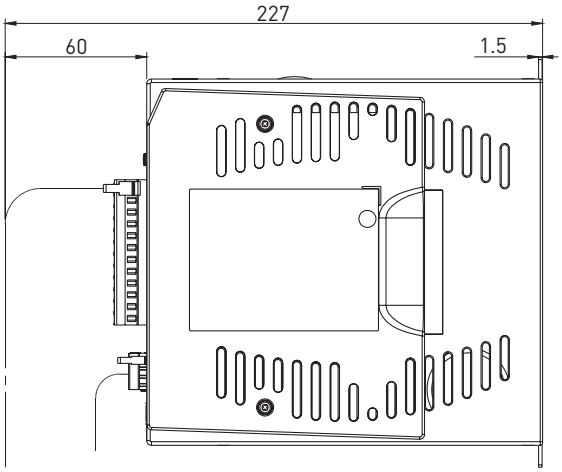

1.6.7 Accessories D2

1.6.7.1 Cables

Table 1.9 **Cables for D2 servo drive**

Article number	Designation	Connector	Figure	Length
8-10-0864	USB parameterisation cable	CN3	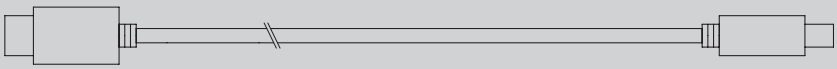	2 m
8-10-0763	Control I/O and encoder output	CN6	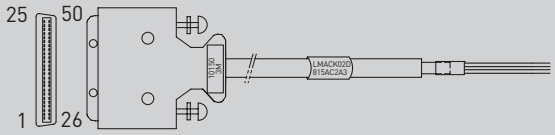	3 m

1.6.7.2 Connectors

Table 1.10 **Connector set for D2 servo drive**

Article number	Designation	Type	Contacts	Quantity
D2-CK3	CN1	WAGO 721-122/026-000	12	1
	CN2	WAGO 734-104	4	1
	CN6	3M 10150-3000PE+10350-52A0-008	50	1

Connector set D2-CK3 is supplied with each D2 drive

1.6.7.3 Brake resistor

Table 1.11 **Brake resistor for D2 servo drive**

Article number	Designation	Resistance [Ω]	Nominal power [W]	Weight [g]	L1 [mm]	L2 [mm]	W [mm]	H [mm]	L [mm]
8-09-0015	Brake resistor	80	300	305	155	144	36	27	600

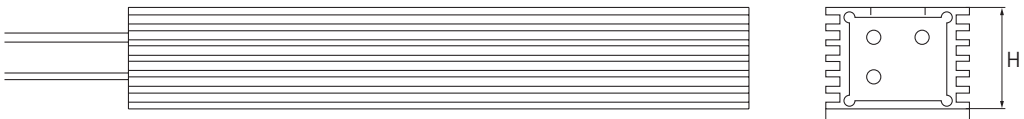

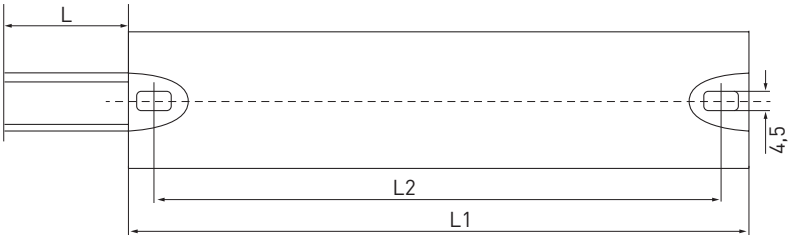

Unit: mm

1.6.7.4 Mains filter

Table 1.12 **Mains filter for D2 servo drive**

Article number	Designation	Type	Nominal current [A]	Leakage current [mA]	Quantity
8-09-0439	D2 mains filter, 1-phase, 50 to 400 W	FN2090-6-06	6	0.67	1
	Ferrite core	KFC-130-B			2
8-09-0374	D2 mains filter, 1-phase, 750 to 1000 W	FN2090-10-06	10	0.67	1
	Ferrite core	KFC-130-B			2
8-09-0440	D2 mains filter, 3-phase	FN3025HL-20-71	20	0.40	1
	Ferrite core	KFC-130-B			2

2. AC servo motors

HIWIN FR highly dynamic AC synchronous servo motors deliver high torques across the entire speed range. Because they have minimal mass inertia moment, they are also suitable for demanding dynamic drive tasks such as high-frequency reversing. The special stator/rotor structure of the FR series achieves very low torque ripple and high power density in a compact form.

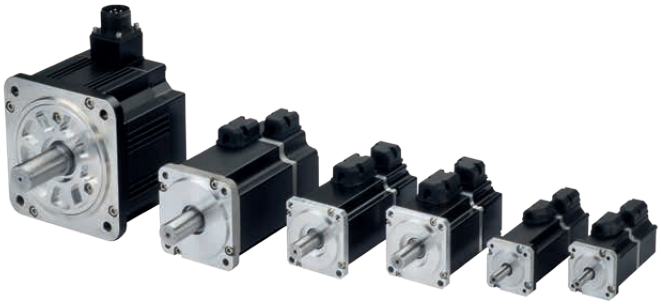

2.1 Characteristics

Table 2.1 **General characteristics**

Size	50 W	100 W	200 W	400 W	750 W	1000 W
Motor type	Permanently excited synchronous servo motor					
Magnets	Neodymium iron boron magnets					
Housing	Aluminium					
Colour	Black					
Motor protection class	IP65					
Connector protection class	IP20					IP65
Motor shaft protection class	IP40 (optional IP65)					
Insulation class	Class A					
Shaft end	With/without feather key groove, with centric threaded hole					
Peak torque	3 × nominal torque					
Service life	> 20 000 h (at nominal load)					
Motor connection	Cable (300 mm) with ready-assembled connector					Connector
Encoder connection	Cable (300 mm) with ready-assembled connector					Connector
Cooling	Convective					
Thermal monitoring	Not available					
Encoder	Incremental 13-bit TTL encoder, 10 000 pulses/revolution					

Table 2.2 **Ambient conditions**

Size	50 W	100 W	200 W	400 W	750 W	1000 W
Ambient temperature	0 °C to 40 °C					
Storage temperature	–15 °C to 70 °C					
Air humidity	Up to 80 % relative air humidity					
Max. installation height	1000 m above sea level					

2.2 Order code

Motor

FR	LS	40	2	0	5	06	A

HIWIN AC servo motor series

Motor type:
LS: Low mass inertia/ (50, 100, 200, 400 W)
MS: Medium mass inertia/ (750 W)
MM: Medium mass inertia/ (1000 W)

Motor power:
05: 50 W
10: 100 W
20: 200 W
40: 400 W
75: 750 W
1K: 1000 W

Power supply:
2: 230 V

Motor brake:
0: Without motor brake
B: With motor brake

Encoder:
5: 13-bit incremental

Motor housing:
A4: 42 mm (50 – 100 W)
06: 60 mm (200 – 400 W)
08: 80 mm (750 W)
13: 130 mm (1000 W)

Motor shaft:
A: Without feather key groove
C: With feather key groove

Motor cable

HVP	S	04	A	A	03M	B

HIWIN motor cable

Suitable for motor type:
S: 50 – 750 W
M: from 750 W

Number of cores:
04: Motor cable without brake
06: Motor cable with brake

Design of motor end:
A: Plastic connector (socket), 50 to 750 W
B: Straight round connector (socket), 1000 W [1)]
C: Angled round connector (socket), 1000 W

Design of amplifier side:
A: Open cable ends

Cable length:
03M: 3 m
05M: 5 m
07M: 7 m
10M: 10 m

Cable type:
B: Highly flexible

Encoder cable

HVE	13I	A	B	05M	B

HIWIN encoder cable

Suitable for encoder type:
13I: 13-bit

Design of motor end:
A: Plastic connector (socket), 50 to 750 W
B: Straight round connector (socket), 1000 W [1)]
C: Angled round connector (socket), 1000 W

Design of amplifier side:
B: Open SRC connector suitable for D2 drive

Cable length:
03M: 3 m
05M: 5 m
07M: 7 m
10M: 10 m

Cable type:
B: Highly flexible

[1)] Delivery time on request

2.3 Motor data

2.3.1 AC servo motor FRLS 50 W

Table 2.3 **Technical data FRLS 50 W**

Motor data	Symbol	Unit	FRLS052 _ _A4 _
Nominal voltage	V	VAC	220
Nominal power	W	W	50
Nominal torque	T_C	Nm	0.16
Nominal current	I_C	A_{eff}	0.9
Peak torque for 1 sec.	T_P	Nm	0.48
Peak current for 1 sec.	I_P	A_{eff}	2.7
Nominal speed	n_N	rpm	3000
Maximum speed for 1 sec.	n_{max}	rpm	4500
Torque constant	K_T	Nm/A_{eff}	0.178
Voltage constant	K_e	V_{eff}/(1000 rpm)	10.74
Winding resistance [1]	R	Ω	4.7
Winding inductance [1]	L	mH	4.7
Mass inertia of rotor	J	$kgm^2 \times 10^{-4}$	0.02
Mass inertia of rotor with brake	J	$kgm^2 \times 10^{-4}$	0.022
Motor weight	M	kg	0.45
Motor weight with brake	M	kg	0.58
Motor insulation class			A
Motor brake (optional) [2]			
Braking torque (static)	T_b	Nm	0.3
Power supply	V	V DC	24 ±10 %
Power consumption	A	A	0.3
Rated input	W	W	6.0
Response time open	t_0	ms	30.0
Response time close	t_R	ms	20.0

[1] Measured between phase–phase
[2] The motor brakes are holding brakes only, not operating brakes

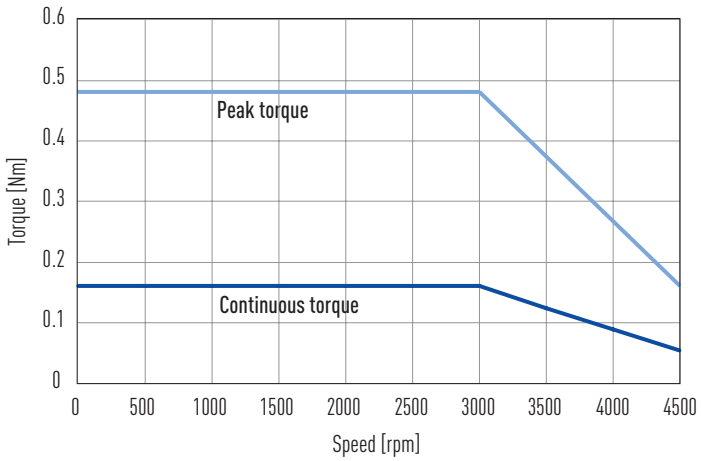

Fig. 2.1 **Torque-speed curve FRLS 50 W**

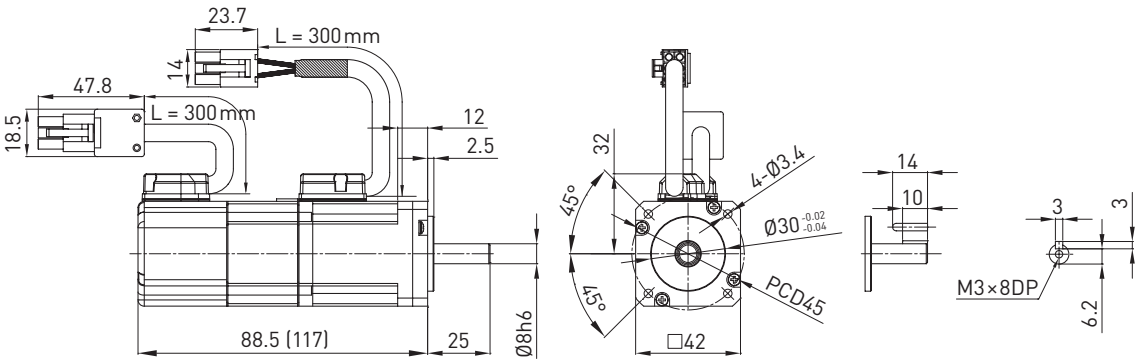

Values in brackets apply to model with motor brake

Fig. 2.2 **Dimensions FRLS 50 W**

2.3.2 AC servo motor FRLS 100 W

Table 2.4 **Technical data FRLS 100 W**

Motor data	Symbol	Unit	FRLS102 _ _A4 _
Nominal voltage	V	VAC	220
Nominal power	W	W	100
Nominal torque	T_C	Nm	0.32
Nominal current	I_C	A_{eff}	0.9
Peak torque for 1 sec.	T_P	Nm	0.96
Peak current for 1 sec.	I_P	A_{eff}	2.7
Nominal speed	n_N	rpm	3000
Maximum speed for 1 sec.	n_{max}	rpm	4500
Torque constant	K_T	Nm/A_{eff}	0.356
Voltage constant	K_e	V_{eff}/(1000 rpm)	21.98
Winding resistance [1]	R	Ω	8
Winding inductance [1]	L	mH	8.45
Mass inertia of rotor	J	$kgm^2 \times 10^{-4}$	0.036
Mass inertia of rotor with brake	J	$kgm^2 \times 10^{-4}$	0.038
Motor weight	M	kg	0.63
Motor weight with brake	M	kg	0.76
Motor insulation class			A
Motor brake (optional) [2]			
Braking torque (static)	T_b	Nm	0.3
Power supply	V	V DC	24 ±10 %
Power consumption	A	A	0.3
Rated input	W	W	6.0
Response time open	t_0	ms	30.0
Response time close	t_R	ms	20.0

[1] Measured between phase–phase
[2] The motor brakes are holding brakes only, not operating brakes

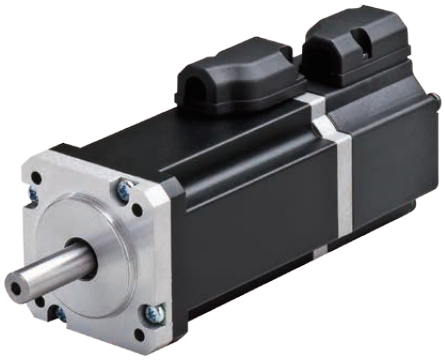

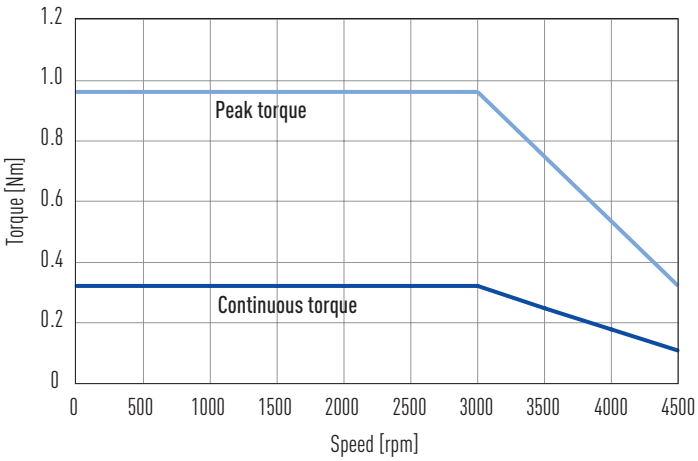

Fig. 2.3 **Torque-speed curve FRLS 100 W**

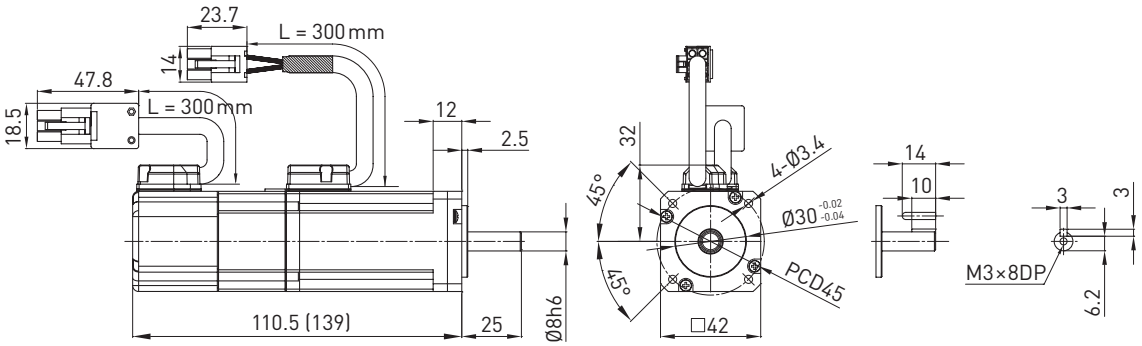

Values in brackets apply to model with motor brake

Fig. 2.4 **Dimensions FRLS 100 W**

2.3.3 AC servo motor FRLS 200 W

Table 2.5 **Technical data FRLS 200 W**

Motor data	Symbol	Unit	FRLS202 _ _06_
Nominal voltage	V	VAC	220
Nominal power	W	W	200
Nominal torque	T_C	Nm	0.64
Nominal current	I_C	A_{eff}	1.7
Peak torque for 1 sec.	T_P	Nm	1.92
Peak current for 1 sec.	I_P	A_{eff}	5.1
Nominal speed	n_N	rpm	3000
Maximum speed for 1 sec.	n_{max}	rpm	4500
Torque constant	K_T	Nm/A_{eff}	0.43
Voltage constant	K_e	V_{eff}/(1000 rpm)	26
Winding resistance [1]	R	Ω	4.3
Winding inductance [1]	L	mH	13
Mass inertia of rotor	J	$kgm^2 \times 10^{-4}$	0.17
Mass inertia of rotor with brake	J	$kgm^2 \times 10^{-4}$	0.21
Motor weight	M	kg	0.95
Motor weight with brake	M	kg	1.5
Motor insulation class			A
Motor brake (optional) [2]			
Braking torque (static)	T_b	Nm	1.3
Power supply	V	V DC	24 ±10 %
Power consumption	A	A	0.3
Rated input	W	W	7.7
Response time open	t_0	ms	30.0
Response time close	t_R	ms	20.0

[1] Measured between phase–phase
[2] The motor brakes are holding brakes only, not operating brakes

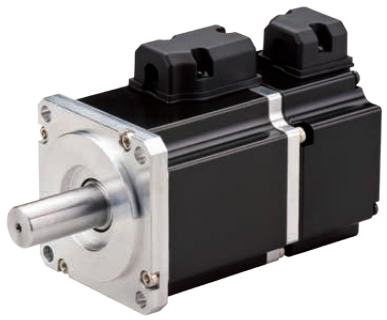

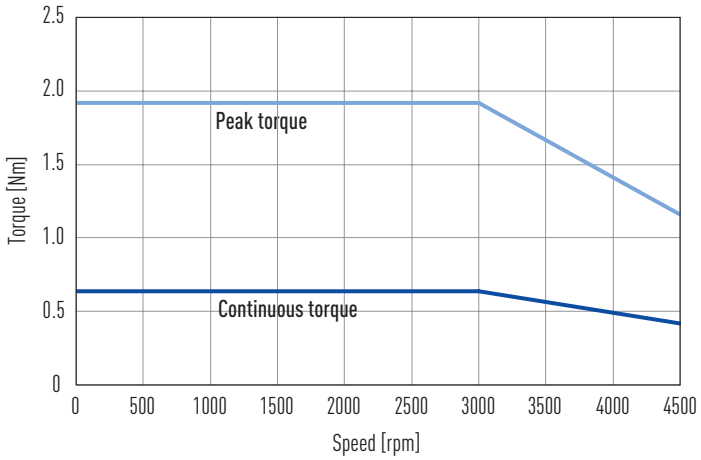

Fig. 2.5 **Torque-speed curve FRLS 200 W**

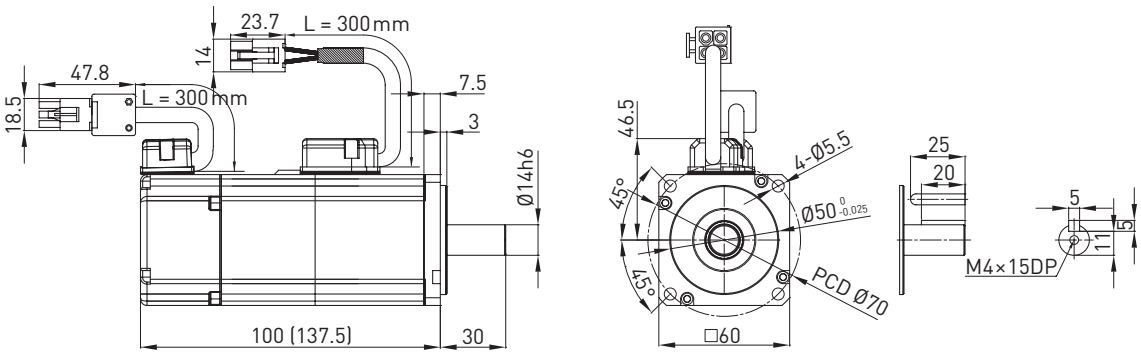

Values in brackets apply to model with motor brake

Fig. 2.6 **Dimensions FRLS 200 W**

2.3.4 AC servo motor FRLS 400 W

Table 2.6 **Technical data FRLS 400 W**

Motor data	Symbol	Unit	FRLS402 _ _06 _
Nominal voltage	V	VAC	220
Nominal power	W	W	400
Nominal torque	T_C	Nm	1.27
Nominal current	I_C	A_{eff}	2.5
Peak torque for 1 sec.	T_P	Nm	3.81
Peak current for 1 sec.	I_P	A_{eff}	7.5
Nominal speed	n_N	rpm	3000
Maximum speed for 1 sec.	n_{max}	rpm	4500
Torque constant	K_T	Nm/A_{eff}	0.53
Voltage constant	K_e	V_{eff}/(1000 rpm)	31.9
Winding resistance [1]	R	Ω	3.5
Winding inductance [1]	L	mH	13
Mass inertia of rotor	J	$kgm^2 \times 10^{-4}$	0.27
Mass inertia of rotor with brake	J	$kgm^2 \times 10^{-4}$	0.31
Motor weight	M	kg	1.31
Motor weight with brake	M	kg	1.86
Motor insulation class			A
Motor brake (optional) [2]			
Braking torque (static)	T_b	Nm	1.3
Power supply	V	V DC	24 ±10 %
Power consumption	A	A	0.3
Rated input	W	W	7.7
Response time open	t_0	ms	30.0
Response time close	t_R	ms	20.0

[1] Measured between phase–phase
[2] The motor brakes are holding brakes only, not operating brakes

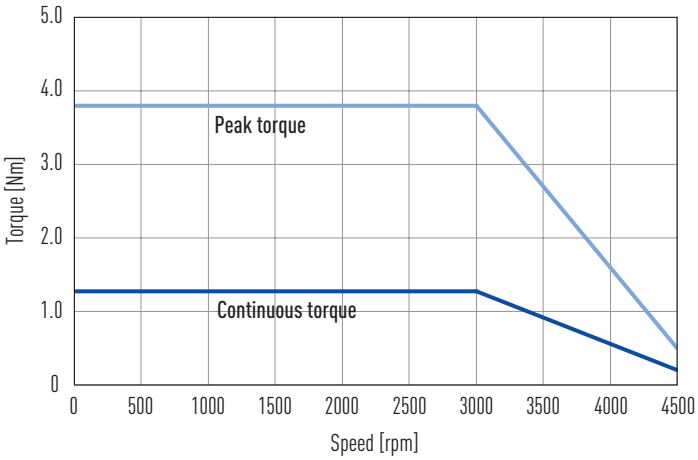

Fig. 2.7 **Torque-speed curve FRLS 400 W**

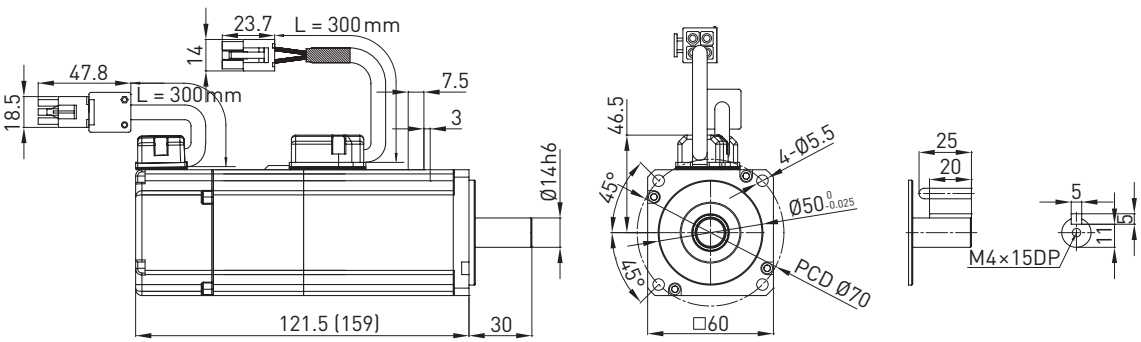

Values in brackets apply to model with motor brake

Fig. 2.8 **Dimensions FRLS 400 W**

2.3.5 AC servo motor FRMS 750 W

Table 2.7 **Technical data FRMS 750 W**

Motor data	Symbol	Unit	FRMS752 _ _08_
Nominal voltage	V	VAC	220
Nominal power	W	W	750
Nominal torque	T_C	Nm	2.4
Nominal current	I_C	A_{eff}	5.1
Peak torque for 1 sec.	T_P	Nm	7.2
Peak current for 1 sec.	I_P	A_{eff}	15.3
Nominal speed	n_N	rpm	3000
Maximum speed for 1 sec.	n_{max}	rpm	4500
Torque constant	K_T	Nm/A_{eff}	0.47
Voltage constant	K_e	V_{eff}/(1000 rpm)	28.4
Winding resistance [1]	R	Ω	0.813
Winding inductance [1]	L	mH	3.4
Mass inertia of rotor	J	$kgm^2 \times 10^{-4}$	1.4
Mass inertia of rotor with brake	J	$kgm^2 \times 10^{-4}$	1.46
Motor weight	M	kg	2.66
Motor weight with brake	M	kg	3.32
Motor insulation class			A
Motor brake (optional) [2]			
Braking torque (static)	T_b	Nm	2.4
Power supply	V	V DC	24 ±10 %
Power consumption	A	A	0.4
Rated input	W	W	8.6
Response time open	t_0	ms	45.0
Response time close	t_R	ms	10.0

[1] Measured between phase–phase
[2] The motor brakes are holding brakes only, not operating brakes

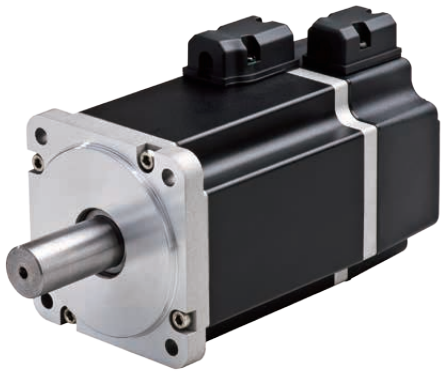

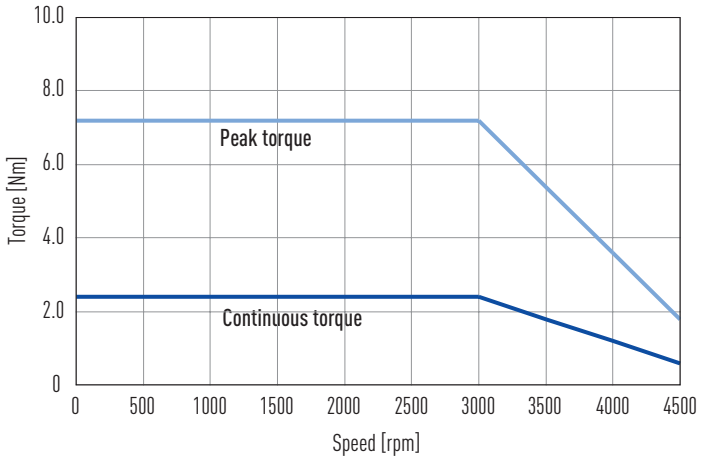

Fig. 2.9 **Torque-speed curve FRMS 750 W**

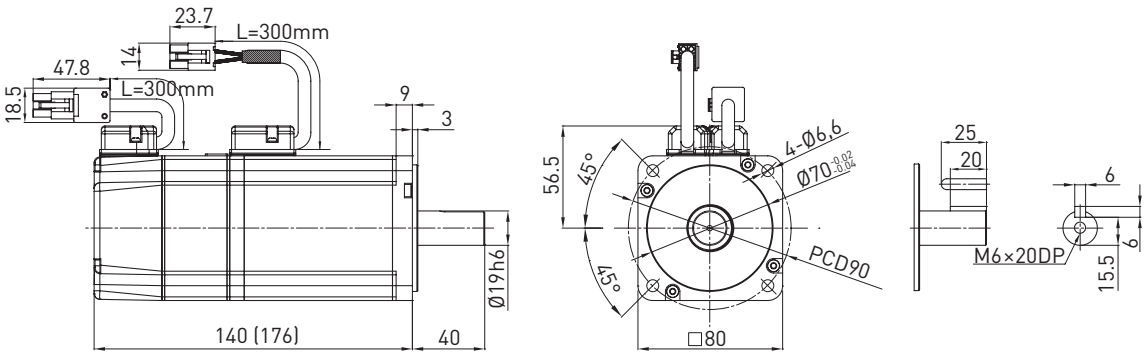

Values in brackets apply to model with motor brake

Fig. 2.10 **Dimensions FRMS 750 W**

2.3.6 AC servo motor FRMM 1000 W

Table 2.8 **Technical data FRMM 1000 W**

Motor data	Symbol	Unit	FRMM1K2 _ _13 _
Nominal voltage	V	VAC	220
Nominal power	W	W	1000
Nominal torque	T_C	Nm	4.77
Nominal current	I_C	A_{eff}	5.1
Peak torque for 1 sec.	T_P	Nm	14.3
Peak current for 1 sec.	I_P	A_{eff}	15.3
Nominal speed	n_N	rpm	2000
Maximum speed for 1 sec.	n_{max}	rpm	3000
Torque constant	K_T	Nm/A_{eff}	0.94
Voltage constant	K_e	V_{eff}/(1000 rpm)	54.7
Winding resistance [1]	R	Ω	0.81
Winding inductance [1]	L	mH	8
Mass inertia of rotor	J	$kgm^2 \times 10^{-4}$	7.6
Mass inertia of rotor with brake	J	$kgm^2 \times 10^{-4}$	8.7
Motor weight	M	kg	5.4
Motor weight with brake	M	kg	6.2
Motor insulation class			A
Motor brake (optional) [2]			
Braking torque (static)	T_b	Nm	10
Power supply	V	V DC	24 ±10 %
Power consumption	A	A	0.6
Rated input	W	W	13.4
Response time open	t_0	ms	80.0
Response time close	t_R	ms	30.0

[1] Measured between phase–phase
[2] The motor brakes are holding brakes only, not operating brakes

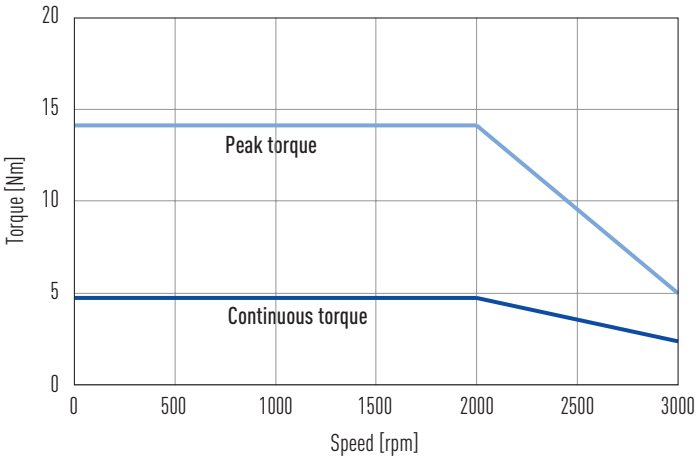

Fig. 2.11 **Torque-speed curve FRMM 1000 W**

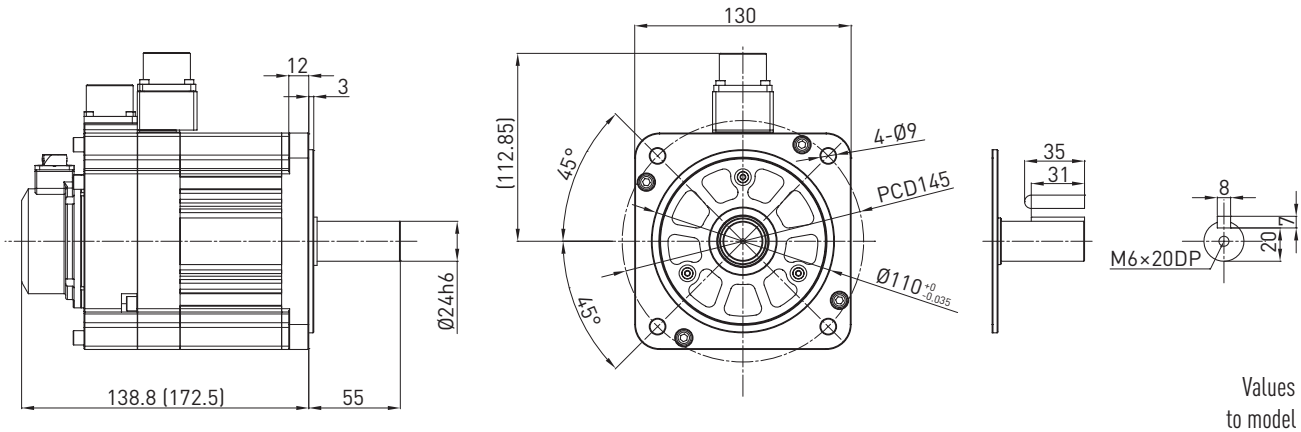

Values in brackets apply to model with motor brake

Fig. 2.12 **Dimensions FRMM 1000 W**

2.4 Options

2.4.1 Motor brake

Table 2.9 **Motor brake specifications for HIWIN servo motors**

Motor type	Unit	50 W	100 W	200 W	400 W	750 W	1000 W
Braking torque (static)	Nm	0.3	0.3	1.3	1.3	2.4	10.0
Maximum speed n_{max}	rpm	4500.0	4500.0	4500.0	4500.0	4500.0	3000.0
Power supply	V DC	24 ±10 %	24 ±10 %	24 ±10 %	24 ±10 %	24 ±10 %	24 ±10 %
Power consumption	A	0.3	0.3	0.3	0.3	0.4	0.6
Rated input	W	6.0	6.0	7.7	7.7	8.6	13.4
Response time open	ms	30.0	30.0	30.0	30.0	45.0	80.0
Response time close	ms	20.0	20.0	20.0	20.0	10.0	30.0

Please note: The motor brakes are holding brakes only, not operating brakes

2.4.2 Feather key groove

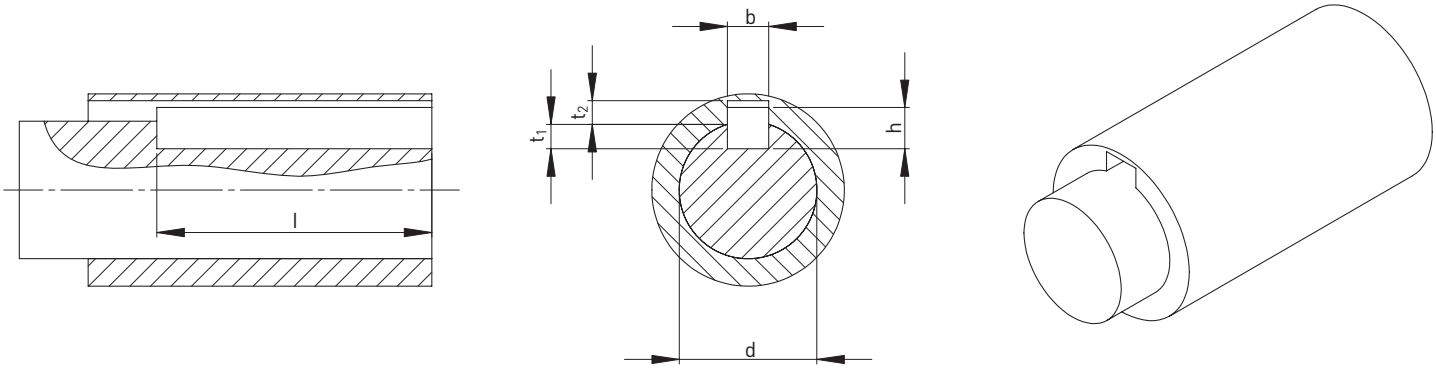

Table 2.10 **Feather key groove specifications for HIWIN servo motors**

Motor type	Unit	50 W	100 W	200 W	400 W	750 W	1000 W
l	mm	10.0	10.0	20.0	20.0	20.0	31.0
b	mm	3.0	3.0	5.0	5.0	6.0	8.0
Tolerance b	mm	0 – 0.025	0 – 0.030	0 – 0.030	0 – 0.030	0 – 0.030	0 – 0.030
h	mm	3.0	3.0	5.0	5.0	6.0	7.0
d	mm	8h6	8h6	14h6	14h6	19h6	24h6
t_1	mm	1.8	1.8	3.0	3.0	3.5	4.0
t_2	mm	1.4	1.4	2.3	2.3	2.8	3.3

Please note: Recommended feather key in accordance with DIN 6885-1 (1968-08), form A

2.5 Accessories

2.5.1 Motor and encoder connectors

In HIWIN servo motors rated between 50 W and 750 W, the motor and encoder cables are routed directly out of the motor. For ease of installation the motor and encoder connectors are fitted on the end of the 300 mm cable and ready to connect. As of 1000 W motors the motor and encoder connectors are fitted on the motor housing, see Fig. 2.13 (Motor and encoder connectors).

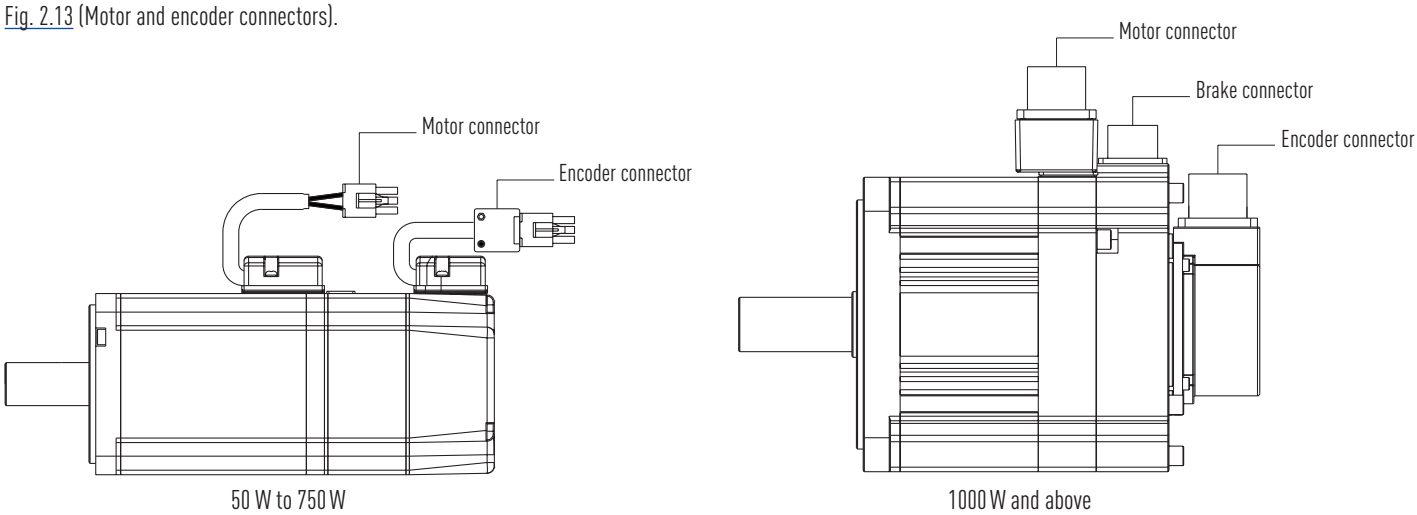

Fig. 2.13 **Overview of motor and encoder connectors**

Different connectors are used for HIWIN servo motors depending on the size and model. The assignment of individual connectors is described in the tables below

- **Motor connectors for 50 W – 750 W motors**

Table 2.11 **Assignment of motor connectors for 50 W – 750 W motors**

Signal	AMP-172167-1 (without brake)	AMP-172168-1 (with brake)
U	3	3
V	2	2
W	1	1
GND	4	4
B+	–	5
B–	–	6

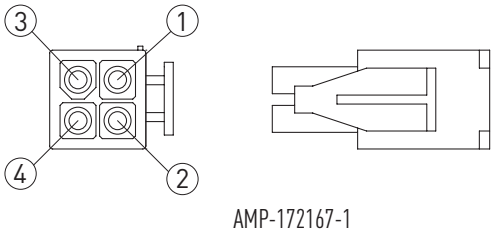

Fig. 2.14 **Connector assignment without brake**
Motor connectors for 50 W – 750 W motors

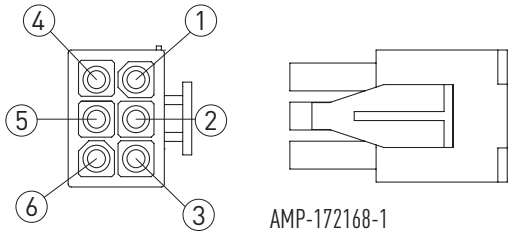

Fig. 2.15 **Connector assignment with brake**
Motor connectors for 50 W – 750 W motors

Motor connectors, 1000 W and above

Motors of 1000 W and above with a motor brake have an additional, separate brake connector (see Fig. 2.17)

Table 2.12 **Assignment of motor connectors, 1000 W and above**

Signal	WPS3102A18-10P-R	WPS3102A14S-7P-R
U	A	–
V	B	–
W	C	–
GND	D	–
B+	–	A
B–	–	C

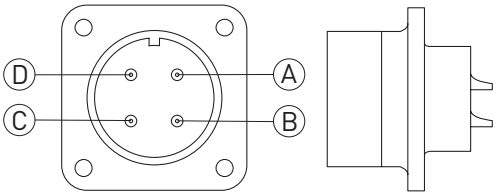

WPS3102A18-10P-R

Fig. 2.16 **Assignment of motor connectors, 1000 W and above**

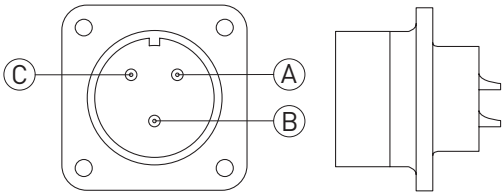

WPS3102A14S-7P-R

Fig. 2.17 **Connector assignment for brake, 1000 W and above**

Encoder connectors (13 bit), 50 W – 750 W

Table 2.13 **Assignment of encoder connectors (13 bit), 50 W – 750 W**

Function	Signal	AMP-172169-1
Power supply	5 V ± 5 %	1
	0 V	2
Encoder signal A/B **Reference signal Z**	A+	3
	A–	4
	B+	5
	B–	6
	Z+	7
	Z–	8
Shielding	Shielding	9

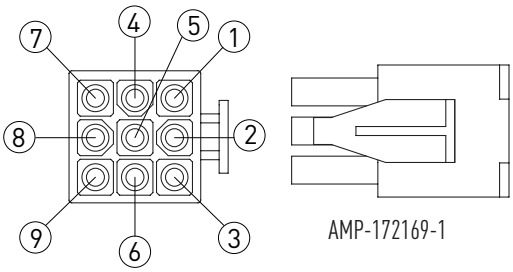

AMP-172169-1

Fig. 2.18 **Encoder connectors (13 bit), 50 W – 750 W**

Encoder connectors (13 bit), 1000 W and above

Table 2.14 **Assignment of encoder connectors (13 bit), 1000 W and above**

Function	Signal	WPS3102A18-1P-R
Power supply	5 V ± 5 %	A
	0 V	B
Encoder signal A/B **Reference signal Z**	A+	C
	A–	D
	B+	E
	B–	F
	Z+	G
	Z–	H
Shielding	Shielding	I

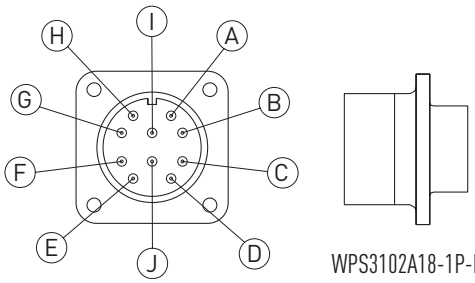

Fig. 2.19 **Encoder connectors (13 bit), 1000 W and above**

2.5.2 Motor and encoder cables

Motor cables

Table 2.15 **Motor cables for 50 W – 750 W motors without brake**

Article number	Order code	Length
8-10-0627	HVPS04AA03MB	3 m
8-10-0628	HVPS04AA05MB	5 m
8-10-0629	HVPS04AA07MB	7 m
8-10-0630	HVPS04AA10MB	10 m

Table 2.16 **Motor cables for 50 W – 750 W motors with brake**

Article number	Order code	Length
8-10-0623	HVPS06AA03MB	3 m
8-10-0624	HVPS06AA05MB	5 m
8-10-0625	HVPS06AA07MB	7 m
8-10-0626	HVPS06AA10MB	10 m

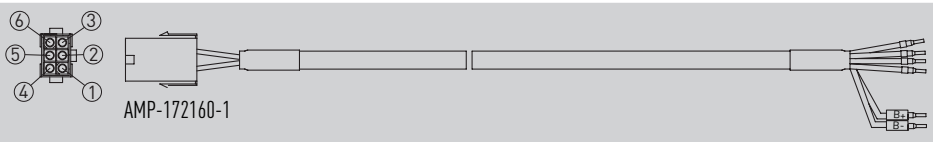

Table 2.17 **Motor cables for 1000 W motors and above without brake**

Article number	Order code	Length
8-10-0851	HVPM04CA03MB	3 m
8-10-0852	HVPM04CA05MB	5 m
8-10-0853	HVPM04CA07MB	7 m
8-10-0854	HVPM04CA10MB	10 m

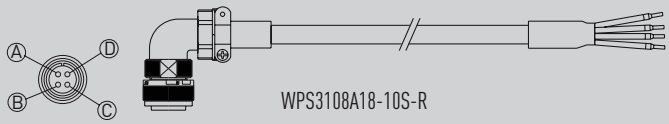

Motor cables with straight connector on request

Table 2.18 **Brake cables for 1000 W motors and above with brake**

Article number	Order code	Length
8-10-0855	HVPM02CA03MB	3 m
8-10-0856	HVPM02CA05MB	5 m
8-10-0857	HVPM02CA07MB	7 m
8-10-0858	HVPM02CA10MB	10 m

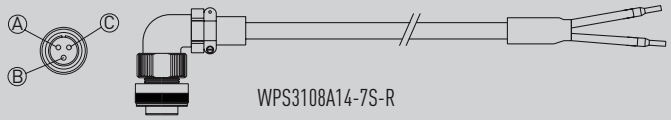

Motor cables with straight connector on request

Encoder cables

Table 2.19 **Encoder cables for 50 W – 750 W motors, D1-N drive**

Article number	Order code	Length
8-10-0755	HVE13IAD03MC	3 m
8-10-0756	HVE13IAD05MC	5 m
8-10-0757	HVE13IAD07MC	7 m
8-10-0758	HVE13IAD10MC	10 m

Table 2.20 **Encoder cables for 50 W – 750 W motors, D2 drive**

Article number	Order code	Length
8-10-0751	HVE13IAB03NB	3 m
8-10-0752	HVE13IAB05NB	5 m
8-10-0753	HVE13IAB07NB	7 m
8-10-0754	HVE13IAB10NB	10 m

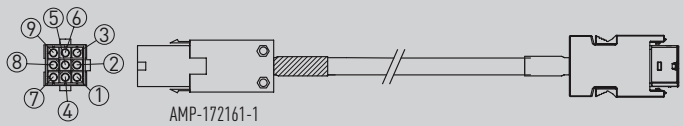

Table 2.21 **Encoder cables for 1000 W motors and above, D2 drive**

Article number	Order code	Length
8-10-0848	HVE13IAB03MB	3 m
8-10-0746	HVE13IAB05MB	5 m
8-10-0849	HVE13IAB07MB	7 m
8-10-0850	HVE13IAB10MB	10 m

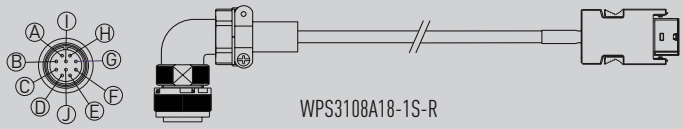

Encoder cables with straight connector on request

Linear Guideways

Ballscrews

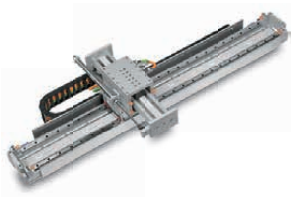

Linear Motor Systems

Linear Axes with Ballscrews

Linear Actuators

Ball Bearings

Linear Motor Components

Rotary Tables

Drives

Germany
HIWIN GmbH
Brücklesbünd 2
D-77654 Offenburg
Phone +49 (0) 7 81 9 32 78 - 0
Fax +49 (0) 7 81 9 32 78 - 90
info@hiwin.de
www.hiwin.de

Taiwan
Headquarters
HIWIN Technologies Corp.
No. 7, Jingke Road
Nantun District
Taichung Precision Machinery Park
Taichung 40852, Taiwan
Phone +886-4-2359-4510
Fax +886-4-2359-4420
business@hiwin.com.tw
www.hiwin.com.tw

Taiwan
Headquarters
HIWIN Mikrosystem Corp.
No. 6, Jingke Central Road
Nantun District
Taichung Precision Machinery Park
Taichung 40852, Taiwan
Phone +886-4-2355-0110
Fax +886-4-2355-0123
business@hiwinmikro.tw
www.hiwinmikro.tw

Italy
HIWIN Srl
Via Pitagora 4
I-20861 Brugherio (MB)
Phone +39 039 287 61 68
Fax +39 039 287 43 73
info@hiwin.it
www.hiwin.it

Poland
HIWIN GmbH
ul. Puławska 405a
PL-02-801 Warszawa
Phone +48 (0) 22 544 07 07
Fax +48 (0) 22 544 07 08
info@hiwin.pl
www.hiwin.pl

Czechia
HIWIN s.r.o.
Medkova 888/11
CZ-62700 BRNO
Phone +42 05 48 528 238
Fax +42 05 48 220 223
info@hiwin.cz
www.hiwin.cz

Slovakia
HIWIN s.r.o., o.z.z.o.
Mládežnicka 2101
SK-01701 Považská Bystrica
Phone +421 424 43 47 77
Fax +421 424 26 23 06
info@hiwin.sk
www.hiwin.sk

Switzerland
HIWIN Schweiz GmbH
Eichwiesstrasse 20
CH-8645 Jona
Phone +41 (0) 55 225 00 25
Fax +41 (0) 55 225 00 20
info@hiwin.ch
www.hiwin.ch

France
HIWIN France s.a.r.l.
20 Rue du Vieux Bourg
F-61370 Echauffour
Phone +33 (2) 33 34 11 15
Fax +33 (2) 33 34 73 79
info@hiwin.fr
www.hiwin.fr

Austria
HIWIN GmbH
info@hiwin.at
www.hiwin.at

Hungary
HIWIN GmbH
info@hiwin.hu
www.hiwin.hu

Netherlands
HIWIN GmbH
info@hiwin.nl
www.hiwin.nl

Japan
HIWIN Corp.
mail@hiwin.co.jp
www.hiwin.co.jp

USA
HIWIN Corp.
info@hiwin.com
www.hiwin.com

China
HIWIN Corp.
www.hiwin.cn

Korea
HIWIN Corp.
www.hiwin.kr

Singapore
HIWIN Corp.
www.hiwin.sg